BOSS CLEANING EQUIPMENT

www.bosscleaningequipment.com

REPLACEMENT PARTS LIST

Save for future reference

P10 Porter Vac Backpack Vacuum/Blower

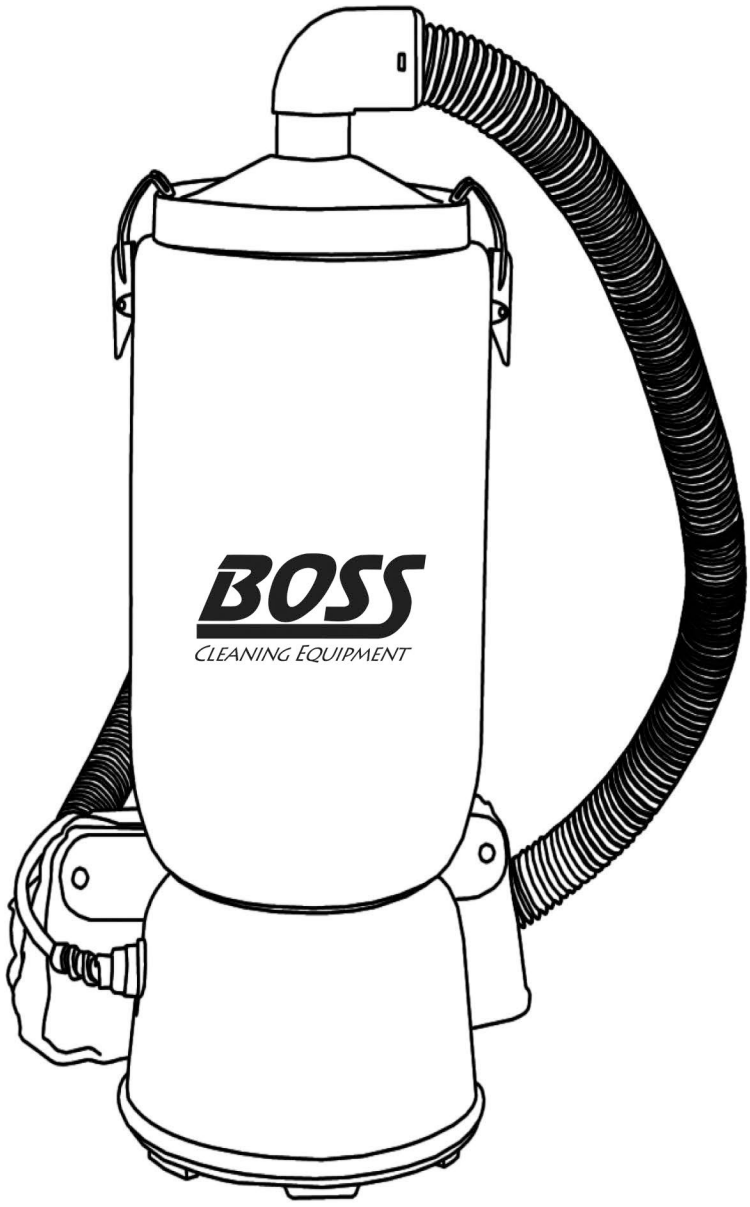

TANK ASSEMBLY

Ref.	Part No.	Description	Qty
1		Filter Guard	1
2	B600903	Motor Inlet Filter	1
3		Filter Guard 2	1
4a	B230307	Motor 120V	1
4b	B522423	Motor 220V	1
5		Thermo-Protector	1
7	B001231	Latch assembly	2
8	B230308	Switch	1
9	B100325	Cord Assembly w/ Switch & Strain Relief	1
10		Strain Relief B	1
19		Rubber Support Gasket	1
20		Foam Filter (sound muffler)	1
21	B704133	Foam Exhaust Filter w/ Gasket	1
23		Self Tapping Screw for Plastic Guard	4
24		Plastic Guard	1
25		Self Tapping Screw for Foot Gasket	4
26		16AWG Wire	1
27		Harness Hanger	2
28a		10Q Tank Upper	1
28b		10Q Tank Lower	1
29	B001232	Foot Gasket Assembly	1
30	B001233	Motor Seal Ring	1
31	B001229	Cloth Filter Bag	4
32	B001228	Paper Filter Bag	1
33		Seal Ring for Top Lid	1
34	B230305	Top Lid	1
36		Grounding Wire	
37		Quick Connector	1
38	B001230	Hose Assembly	
39	B230309	Harness	1
40	B704132	Extension Cord 50’	1

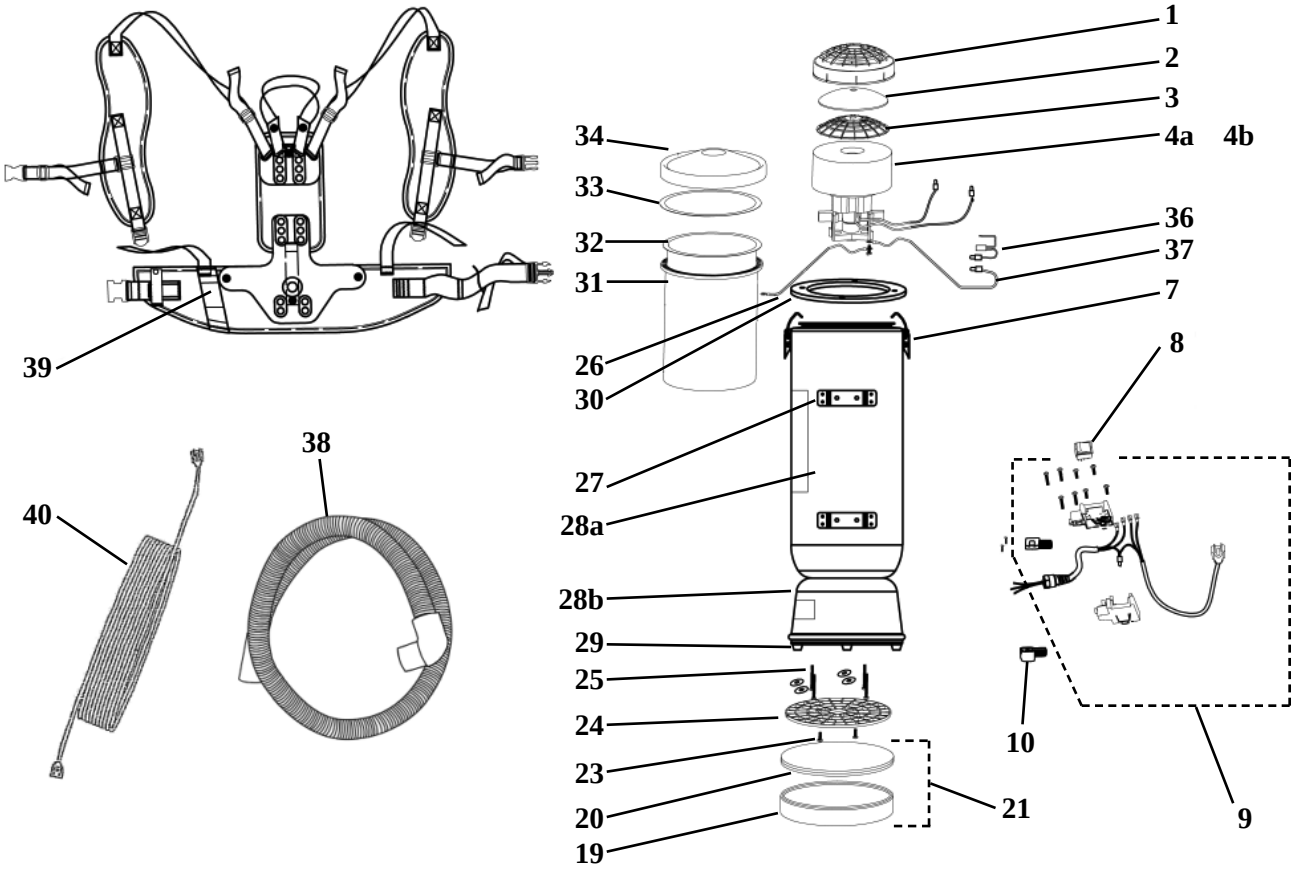
1
2
3
4a
4b
34
33
32
31
36
37
7
26
30
8
27
28a
28b
29
25
24
23
20
19
21
10
9
39
38
40

Tool Kit

Part No.	Description	Qty
B521007	2 Piece Wand	1
B701613	Upholstery Tool	1
B701615	Crevice Tool	1
B000394	Dusting Brush	1
B527095	Floor Brush	1
B001230	Hose Assembly	1

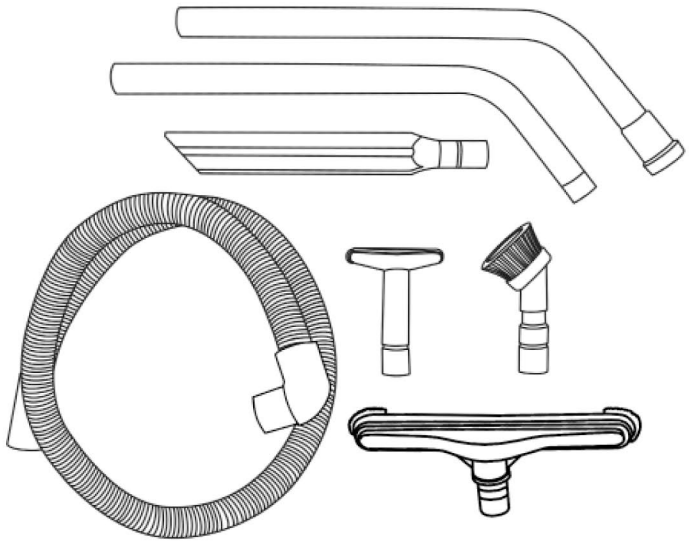

BOSS CLEANING EQUIPMENT

10708 N. 46th Street • Tampa, FL 33617
(800)232-2635 • Fax (813) 971-6090
www.bosscleaningequipment.com