ILLUSTRATED PARTS LIST

KUBOTA

MODEL WG752-E2BBH

GASOLINE ENGINE

MONSTER JANITORIAL CLICK TO ORDER PARTS

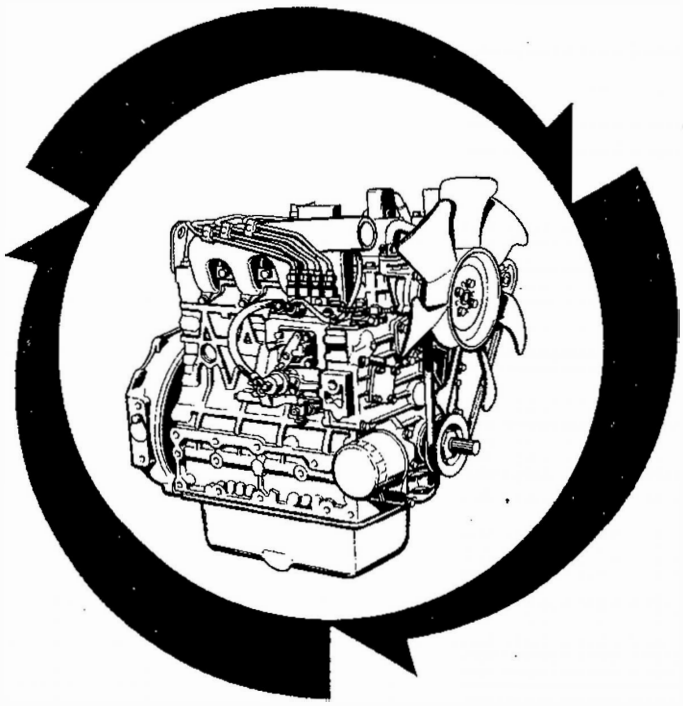

Kubota

97898 55290

12.04.KEA
>SOEM-03-272
>SOEM-04-148

INSTRUCTIONS
INSTRUCTION

① ⑪ ②

0102 PISTON AND CRANKSHAFT / PISTON ET VILEBREQUIN

〔B〕 **B02-R**

⑩ → S.No. ; A:<=15000, B:14000 to 15000

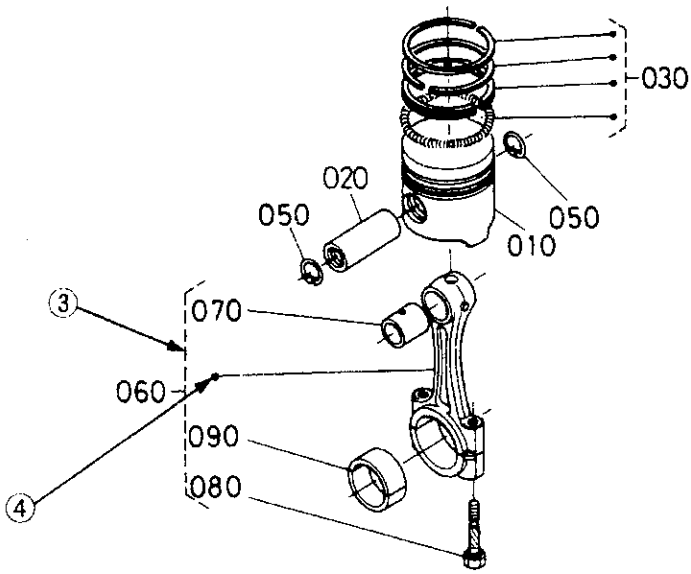

⑤ ⑥ ⑦ ⑧ ⑥ ⑨

A:XXXX, B:XXXX

REF. No. POS.No.	PART No. REFERENCE	PART NAME	DESIGNATION	Q'TY/S.No. Q'TE/No.S. A	Q'TY/S.No. Q'TE/No.S. B	I.C.	REMARKS REMARQUES
010	15800-0000-0	PISTON	PISTON	1 ~15000	1 ~15000		(Example—1) (Exemple—1)
010	15800-0000-2	PISTON	PISTON	1 15001~	1 15001~		
020	15800-1000-0	PIN,PISTON	AXE DE PISTON	1 ~15000	1 ~15000		(Example—2) (Exemple—2)
020	15800-1000-2	PIN,PISTON	AXE DE PISTON	1 15001~	1 15001~		
030	15800-2000-0	ASSY PISTON RING	ENS.JEU DE SEGMENTS	1 ~15000	1 ~15000		
030	15830-2000-0	ASSY PISTON RING	ENS.JEU DE SEGMENTS	1 15001~	1 15001~		
							(Example—3) (Exemple—3)

① Fig. No. ..... Represents No. corresponding to each group name.

② L. No. (location No.) ..... Substitute for conventional page numbering.Left-hand pages of the parts list are numbered in XXX-L, and the right-hand pages in XXX-R.
The location No. are also used in numerical index at the end of parts list.

③ Components ..... The components of an assembly are identified by a bracket of dotted lines.

④ Point ..... Indicates that the parts is not sold independently.
The assembly (Ref.No.060) containing the part needs to be ordered.

⑤ REF. No. ..... Reference numbers are assigned to parts in the illustration.The code number of a part in the illustration can be identified by referring to the same reference number in the parts list.

⑥ Model name ..... The name of the basic model is indicated in this column. Other applicable models are indicated on the "REMARKS" column ⑨.

⑦ S. No. (serial No.) ..... Indicates a group of serial numbers to which a design change is applied.

⑧ I. C. (interchangeability) ..... Indicates the interchangeability of parts due to design change.

Example-1 ..... ⇦ indicates that a new part can replace an old part, but not vice versa.
15800-0000-0 is applicable to the first serial number to S. No. 15000.
15800-0000-2 is applicable to the first serial number and above.

Example-2 ..... ⇹ indicates that the new and old parts are not interchangeable.
15800-1000-0 is applicable to the first serial number to S. No. 15000.
15800-1000-2 is applicable to S. No. 15001 and above.

Example-3 ..... ⇦ indicates that the new and old parts are interchangeable.
Both 15800-2000-0 and 15830-2000-0 are applicable to the first serial number and above.

⑨ REMARKS 1 ..... In this column, enter other applicable model names, dimensions and other special items.
The following symbols and abbreviations are used throughout this book.
29＊12.00-15 .... Tire size
sq.m ..... m^2 sq.mm .... mm^2
cu.m ..... m^3 cu.mm .... mm^3
D .... Diameter L .... Length

⑩ REMARKS 2 ..... The following expressions are used in NOTE for each group.
Machines' serial numbers are indicated as follows.
<=15000 ..... Serial number below 15000.
>=15001 ..... Serial number above 15001.
14000 to 15000 ..... Serial number 14000 to 15000.
For some models, the above expressions may also be used REMARKS 1 ⑨.

⑪ Specifications (for sister models) ..... The types and destinations of sister models are indicated. These indications are given to tell their relevant pages in this book.

① No. de Fig ..... Représente le No. de chaque nom de groupe.

② No.d'emplacement ... Représente le substitut du numérotage de page ordinaire. Les pages du côté gauche de la liste des pièces détachées sont numérotées en XXX-L.
Celles du côté droit sont numérotées en XXX-R. Les No. d'emplacement sont également utilisés dans l'index numérique à la fin de la liste des pièces détachées.

③ Composantes ..... Les composantes d'un ensemble sont identifiées par des parenthèses en pointillé.

④ Point ..... Indique que la pièce n'est pas à vendre toute seule.
Elle doit être commandée avec l'ensemble (POS.No. 060) qui la contient.

⑤ POS.No. ..... Des numéros de position sont donnés aux pièces représentées dans l'illustration.
Le référence d'une pièce de l'illustration peut être identifié en se reportant au même numéro de position indiqué dans la liste des pièces détachées.

⑥ Nom de type ..... Le nom du type de base est indiqué dans cette colonne. Les autres modèles sont indiqués dans la colonne des "REMARQUES" ⑨.

⑦ No. S. (No. de série) ..... Indique un groupe de numéros de série qui a subit des modifications de modèle.

⑧ I. C. (permutabilité) ..... Indique la permutabilité des pièces due à un changement dans le modèle.

Exemple-1 ..... ⊐ indique que la nouvelle pièce peut remplacer la vieille, mais pas vice versa.
Le 15800-0000-0 s'applique au premier numéro de série jusqu'au No.S. 15000.
Le 15800-0000-2 s'applique au premier numéro de série et à ceux ci-dessus.

Exemple-2 ..... ⊐⊏ indique que la nouvelle et vielle pièces sont permutables.
Le 15800-1000-0 s'applique au premier numéro de série jusqu'au No.S. 15000.
Le 15800-1000-2 s'applique au No.S. 15001 et à ceuxci-dessus.

Exemple-3 ..... ⊐ indique que la nouvelle piése et la vielle piéce sont interchangeable. Toules deux numéros 15800-2000-0 et 15830-2000-0 sont applicables a premier numéro de cette depuis.

⑨ REMARQUES 1 ... Cette colonne renferme d'autres noms de modèles applicables, les dimensions et autres éléments spéciaux.
Les symboles abréviations suivants sont utilisés dans l'ensemble de ce manuel.
29∗12.00-15 .... Dimension des pneus
sq.m ..... m^2 sq.mm .... mm^2
cu.m ..... m^3 cu.mm .... mm^3
D .... Diamètre L .... Longueur

⑩ REMARQUES 2 ... Les expressions suivantes sont utilisées dans la NOTE de chaque groupe.
Les numéros de série des machines sont indiqués de la manière suivante.
<=15000 ..... Numéros de série au-dessous de 15000.
>=15001 ..... Numéros de série au-dessus de 15001.
14000 to 15000 ..... Numéros de série 14000 á 15000.
Pour certaines modèles, les expressions ci-dessus peuvent aussi être utilisées dans la rubrique des REMARQUES 1 ⑨.

⑪ Spécifications (pour modèles soeurs) ..... Les types et les destinations des modèles soeurs sont indiqués. Ces indications sont données pour donner leurs pages relatives dans ce livre.

CONTENTS

[WG752-E2BBH]

0001 CRANK CASE ····· 1
0002 OIL PAN ····· 2
0003 CYLINDER HEAD ····· 3
0004 GEAR CASE ····· 4
0005 HEAD COVER ····· 5
0006 OIL FILTER ····· 6
0007 DIPSTICK AND GUIDE ····· 7
0008 OIL PUMP ····· 8
0100 MAIN BEARING CASE ····· 9
0101 CAMSHAFT AND IDLE GEAR SHAFT ····· 10
0102 PISTON AND CRANKSHAFT ····· 11
0103 FLYWHEEL ····· 13
0105 FUEL CAMSHAFT ····· 14
0200 GOVERNOR LEVER ····· 15
0201 FUEL FILTER ····· 16
0202 CARBURETTOR ····· 17
0204 FORK LEVER ····· 18
0205 SPEED CONTROL LEVER ····· 19
0300 SPARK PLUG AND DISTRIBUTOR ····· 20
0301 DISTRIBUTOR (COMPONENT PARTS) ····· 21
0302 IGNITION COIL ····· 22
0400 DYNAMO AND PULLEY ····· 23
0401 DYNAMO (COMPONENT PARTS) ····· 24
0404 STARTER ····· 25
0405 STARTER (COMPONENT PARTS) ····· 26
0406 OIL SWITCH/THERMOMETER AND PLUG ····· 27
0500 WATER FLANGE AND THERMOSTAT ····· 28
0501 WATER PUMP ····· 29
0503 WATER PIPE ····· 30
0504 FAN ····· 31
0600 VALVE AND ROCKER ARM ····· 32
0601 INLET MANIFOLD ····· 33
0602 EXHAUST MANIFOLD ····· 34
0808 ACCESSORIES AND SERVICE PARTS ····· 35
0809 LABEL AND OPERATOR'S MANUAL ····· 36
0906 OPTION ····· 37
NUMERICAL INDEX ····· 38

SOMMAIRE

[WG752-E2BBH]

0001 CARTER MOTEUR ····· 1
0002 CARTER D'HUILE ····· 2
0003 CULASSE ····· 3
0004 CARTER DE DISTRIBUTION ····· 4
0005 COUVRE-CULBUTEURS ····· 5
0006 FILTRE D'HUILE ····· 6
0007 JAUGE D'HUILE ET GUIDE ····· 7
0008 POMPE D'HUILE ····· 8
0100 PALIERS DE VILEBREQUIN ····· 9
0101 ARBRE A CAMES ET ARBRE DE PIGNON FOU ····· 10
0102 PISTONS ET VILEBREQUIN ····· 11
0103 VOLANT MOTEUR ····· 13
0105 ARBRE A CAMES DE CARBURANT ····· 14
0200 LEVIER DE REGULAT ····· 15
0201 FILTRE A CARBURANT ····· 16
0202 CARBURATEUR ····· 17
0204 LEVIER A FOURCHE ····· 18
0205 LEVIER DE VIT-CONTROLE ····· 19
0300 BOUGIE ALLUMAGE ET DISTRIBUTEUR ····· 20
0301 DISTRIBUTEUR (PARTIES COMPOSANTES) ····· 21
0302 BOBINE D'ALLUMAGE ····· 22
0400 DYNAMO ····· 23
0401 DYNAMO (PARTIES COMPOSANTES) ····· 24
0404 DEMARREUR ····· 25
0405 DEMARREUR (PARTIES COMPOSANTES) ····· 26
0406 CONTACT A HUILE THERMOMETRE ET OBTURATEUR ····· 27
0500 BRIDE ET THERMOSTAT ····· 28
0501 POMPE A EAU ····· 29
0503 TUYAU D'EAU ····· 30
0504 VENTILATEUR ····· 31
0600 SOUPAPES ET CULBUTEURS ····· 32
0601 COLLECTEUR D'ADMISSION ····· 33
0602 COLLECTEUR D'ECHAPPEMENT ····· 34
0808 ACCESSOIRES ET PIECES DE SERVICE ····· 35
0809 JEU D'ETIQUETTES ET INSTRUCTIONS ····· 36
0906 OPTION ····· 37
INDEX NUMERIQUE ····· 38

0001 CRANK CASE
CARTER MOTEUR

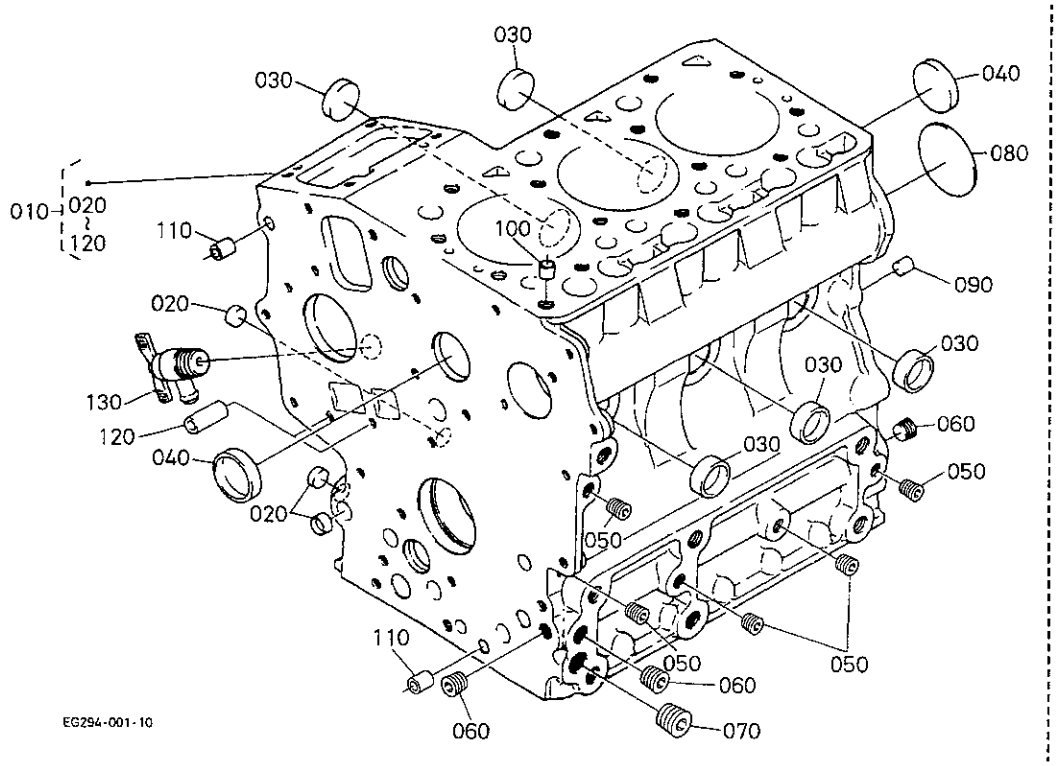

A:WG752-E2BBH

REF.No. POS.No.	PART No. REFERENCE	PART NAME	DESIGNATION	Q'TY/S.No. Q'TE/No.S. A	B	I.C.	REMARKS REMARQUES
010	12691-0101-3	ASSY CRANKCASE	ENS. BLOC MOTEUR	1 <=3S8996	-		#
010	12691-0101-6	ASSY CRANKCASE	ENS. BLOC MOTEUR	1 >=3U0001	-	←	#
010	12691-0101-7	ASSY CRANKCASE	ENS. BLOC MOTEUR	1 >=4A0001	-	←	#
020	16851-9626-0	CAP, SEALING	PASTILLE	3	-		
030	16851-9627-0	CAP, SEALING	PASTILLE	5	-		
040	15451-9627-0	CAP, SEALING	PASTILLE	2	-		
050	15261-9601-0	PLUG	BOUCHON	5	-		
060	15521-9602-0	PLUG	BOUCHON	3	-		
070	15521-9603-0	PLUG	BOUCHON	1	-		
080	15261-9616-0	PLUG, EXPANSION	BOUCHON EXPANSIBLE	1	-		
090	05012-00814	PIN, STRAIGHT	GOUPILLE CYLINDLIQUE	2	-		
100	15221-3365-0	PIN, PIPE	GICLEUR	1	-		
110	15231-3396-0	PIN, PIPE	GICLEUR	2	-		
120	17331-5919-0	PIN, PIPE	GICLEUR	2	-		
130	15841-7302-0	ASSY COCK, DRAIN	ENS. ROBINET VIDANGE	1	-		

↔ Interchangeable; ≠ not interchangeable; ← new for old; → old for new

0002 OIL PAN
CARTER D'HUILE

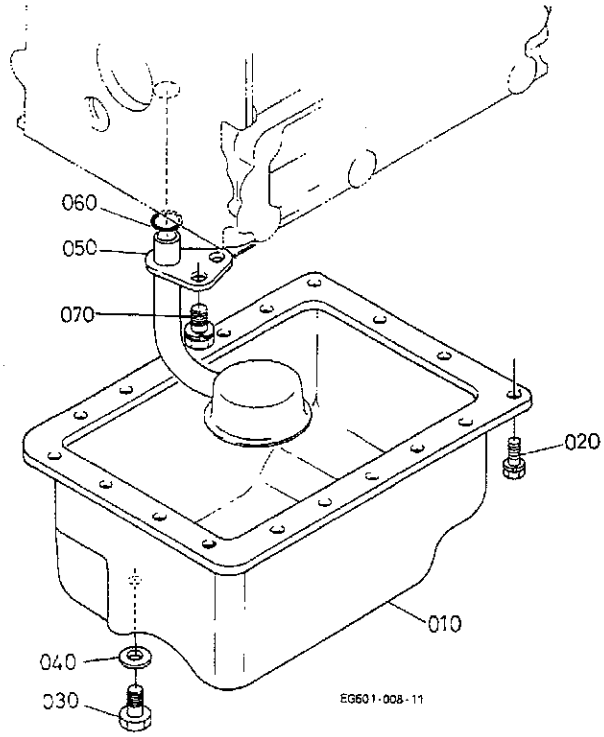

A:WG752-E2BBH

REF. No. PGS. No.	PART No. REFERENCE	PART NAME	DESIGNATION	Q'TY/S. No. Q'TE/No. S. A	B	I. C.	REMARKS REMARQUES
010	15862-0150-0	COMP. OIL PAN	CARTER D'HUILE COMP.	1	-		
020	01023-50612	BOLT	VIS	18	-		
030	15221-3375-0	PLUG	BOUCHON	1	-		
040	6C090-5896-0	GASKET	JOINT	1	-		
050	16851-3211-0	FILTER, OIL	FILTRE D'HUILE	1	-		
060	04814-00160	O RING	JOINT TORIQUE	1	-		
070	01123-60814	BOLT	VIS	1	-		

↔ Interchangeable; ≠ not interchangeable; ← new for old; → old for new

0003 CYLINDER HEAD
CULASSE

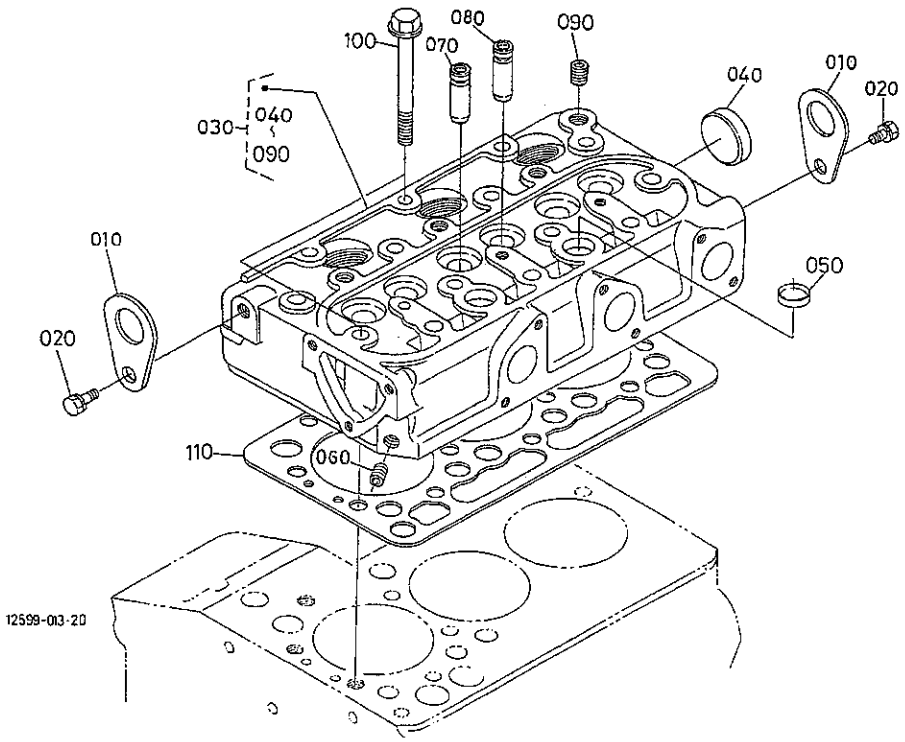

A:WG752-E2BBH

REF. No. POS. No.	PART No. REFERENCE	PART NAME	DESIGNATION	Q'TY/S. No. Q'TE/No. S. A	B	I. C.	REMARKS REMARQUES
010	15221-0175-0	HOOK, ENGINE	ANNEAU DE LEVAGE	2	-		
020	01123-60816	BOLT	VIS	2	-		
030	EG601-0304-0	COMP. CYLINDER HEAD	CULASSE COMPLET	1	-		
040	15321-9626-0	CAP, SEALING	PASTILLE	1	-		
050	15261-0337-0	CAP, SEALING	PASTILLE	2	-		
060	15261-9601-0	PLUG	BOUCHON	1	-		
070	15841-1354-0	GUIDE, INLET VALVE	GUIDE SOUP. D'ADMISS.	3	-		
080	15841-1356-0	GUIDE, EXHAUST VALVE	GUIDE SOUP. D'ECHAP.	3	-		
090	15841-9602-0	PLUG	BOUCHON	1	-		
100	14601-0345-0	BOLT, CYLINDER HEAD	VIS DE CYLINDRE	14	-		
110	12691-0331-0	GASKET, CYLINDER HEAD	JOINT DE CULASSE	1 <=4B1174	-		#
110	EG601-0331-0	GASKET, HEAD	JOINT	1 >=4C0001	-	↔	#

↔ Interchangeable; ≠ not interchangeable; ← new for old; → old for new

0004 GEAR CASE
CARTER DE DISTRIBUTION

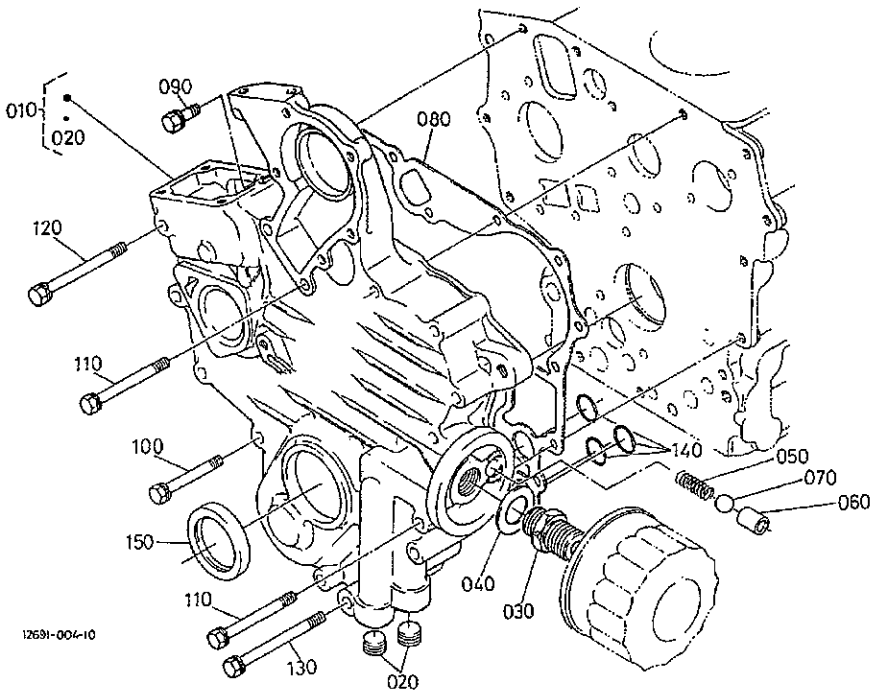

A:WG752-E2BBH

REF. No. PCS. No.	PART No. REFERENCE	PART NAME	DESIGNATION	Q'TY/S. No. Q'TE/No. S. A	B	I. C.	REMARKS REMARQUES
010	12691-0402-0	COMP. CASE, GEAR	CARTER DISTR. COMP.	1	-		
020	16851-9601-0	PLUG	BOUCHON	2	-		
030	15241-3229-0	JOINT, PIPE	RACCORD DE TUYAU	1	-		
040	15841-9401-0	WASHER, PLAIN	RONDELLE FREIN	1	-		
050	16851-3695-0	SPRING	RESSORT	1	-		
060	15841-3693-0	SEAT, VALVE	SIEGE DE SOUPAPE	1	-		
070	07715-03211	BALL	BILLE	1	-		
080	15862-0413-2	GASKET, GEAR CASE NA	JOINT DE CARTER-DIS.	1	-		
090	01023-50618	BOLT	VIS	1	-		
100	01023-60650	BOLT	VIS	8	-		
110	15841-9101-0	BOLT	VIS	5	-		
120	01023-60670	BOLT	VIS	1	-		
130	01023-50675	BOLT	VIS	1	-		
140	04814-06130	O RING	JOINT TORIQUE	3	-		
150	15877-0414-0	SEAL, OIL	BAGUE JOINT	1	-		

↔ Interchangeable; ≠ not interchangeable; ← new for old; → old for new

0005 HEAD COVER
COUVRE-CULBUTEURS

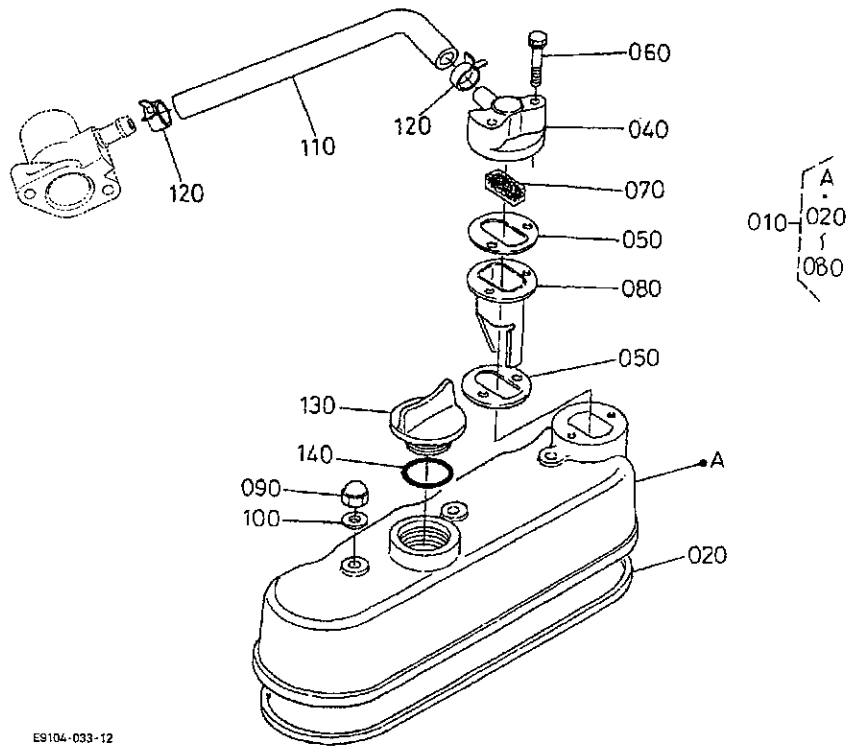

A:WG752-E2BBH

REF. No. PCS No.	PART No. REFERENCE	PART NAME	DESIGNATION	Q'TY/S. No. Q'TE/No. S. A	B	I. C.	REMARKS REMARQUES
010	EG261-1450-0	ASSY COVER, CYL. HEAD	ENS. COUVERCLE	1	-		
020	16861-1452-2	GASKET, HEAD COVER	JOINT COUVRE-CULASSE	1	-		
030	----	BLANK	BLANC	-	-		
040	EG261-0542-0	COVER, BREATHER	COUVERCLE ASPIRATEUR	1	-		
050	17524-0513-0	GASKET	JOINT	2	-		
060	01023-50635	BOLT	VIS	2	-		
070	15841-0567-0	ELEMENT, BREATHER	TAMIS DU RENIFLARD	1	-		
080	17472-1449-0	PLATE, BREATHER	PLAQUE, RENIFLARD	1	-		
090	15841-1462-0	NUT	ECROU	3	-		
100	15601-9665-0	GASKET	JOINT	3	-		
110	EG261-0551-2	TUBE, BREATHER	TUBE D'ASPIRATEUR	1	-		
120	16241-7336-0	BAND, PIPE	COLLIER DE TUYAU	2	-		
130	15852-3314-0	PLUG, OIL FILLER	BOUCHON, REMPLIS. H/L	1 <=2L0251	-		
130	E9151-3314-0	PLUG, OIL FILLER	BOUCHON, REMPLIS. H/L	1 >=2L0001	-	↔	
140	04814-50300	O RING	JOINT TORIQUE	1	-		

↔ Interchangeable; ≠ not interchangeable; ← new for old; → old for new

0006 OIL FILTER
FILTRE D'HUILE

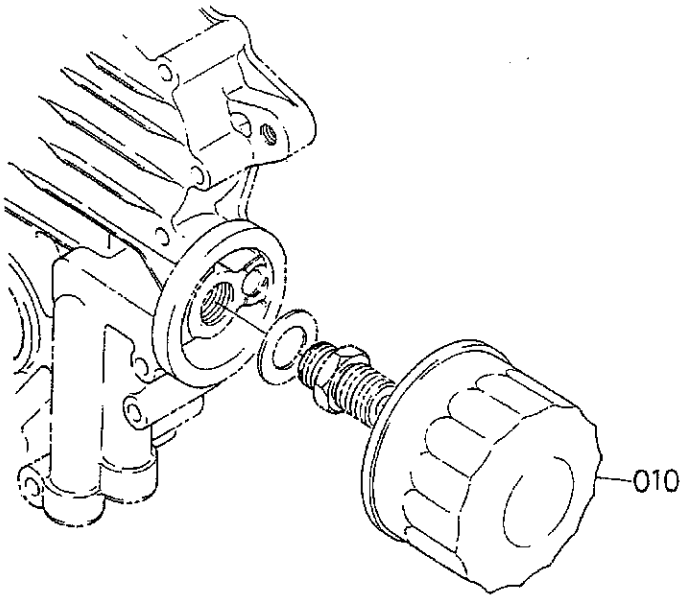

12691-006-10

A:WG752-E2BBH

REF. No. POS. No.	PART No. REFERENCE	PART NAME	DESIGNATION	Q'TY/S. No. Q'TE/No. S. A	B	I. C.	REMARKS REMARQUES
010	15853-3243-0	CARTRIDGE, OIL FILTER	CARTOUCHE FILTRANTE	1	-		

↔ Interchangeable; ≠ not interchangeable; ← new for old; → old for new

0007 DIPSTICK AND GUIDE
JAUGE D'HUILE ET GUIDE

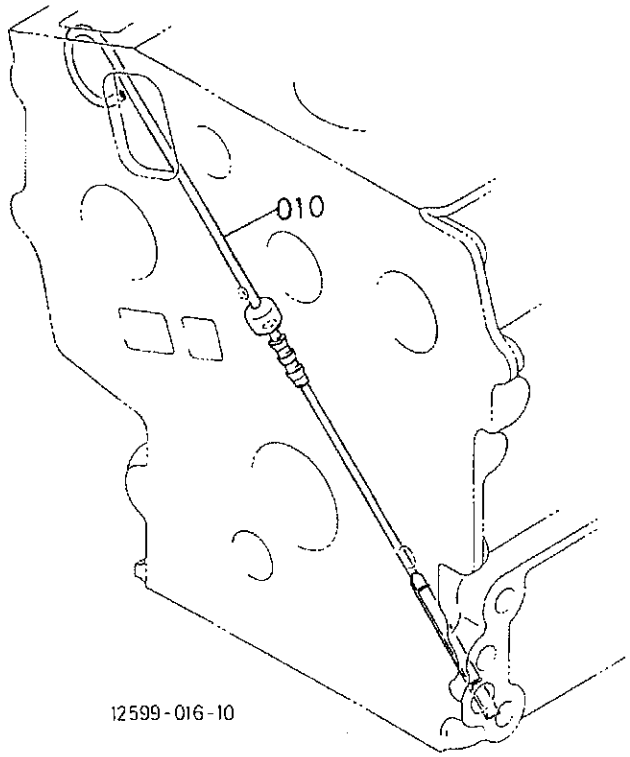

A:WG752-E2BBH

REF. No. PCS No.	PART No. REFERENCE	PART NAME	DESIGNATION	Q'TY/S. No. Q'TE/No. S. A	B	I. C.	REMARKS REMARQUES
010	16851-3641-0	GAUGE, OIL	JAUGE D'HUILE	1	–		

↔ Interchangeable; ≠ not interchangeable; ← new for old; → old for new

0008 OIL PUMP
POMPE D'HUILE

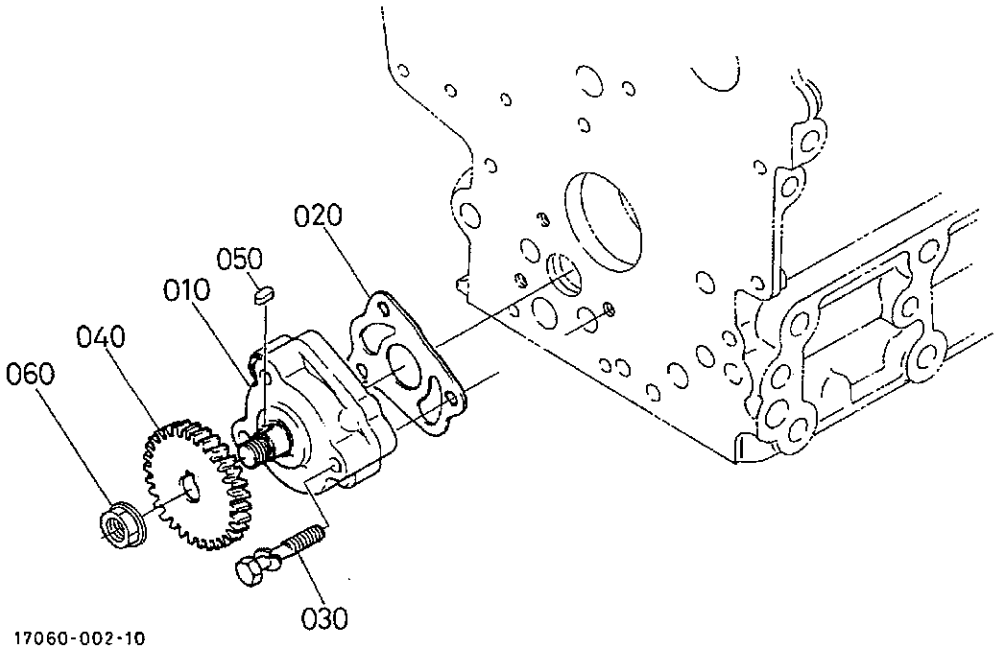

A:WG752-E2BBH

REF. No. PCS. No.	PART No. REFERENCE	PART NAME	DESIGNATION	Q'TY/S. No. Q'TE/No. S. A	B	I. C.	REMARKS REMARQUES
010	16851-3501-0	ASSY PUMP, OIL	ENS. POMPE A HUILE	1 <=2J7251	-		
010	16851-3501-2	ASSY PUMP, OIL	ENS. POMPE A HUILE	1 >=2L0001	-	←	
020	16851-3515-2	GASKET, OIL PUMP NA	JOINT POMPE A HUILE	1	-		
030	15841-9105-0	BOLT	VIS	3	-		
040	15841-3566-0	GEAR, OIL PUMP DRIVE	PIGNON ENTRAIN. POMPE	1	-		
050	05712-00408	KEY, FEATHER	CLAVETTE	1	-		
060	02783-50100	NUT, FLANGE	ECROU A EMBASE	1	-		

↔ Interchangeable; ≠ not interchangeable; ← new for old; → old for new

0100 MAIN BEARING CASE
PALIERS DE VILEBREQUIN

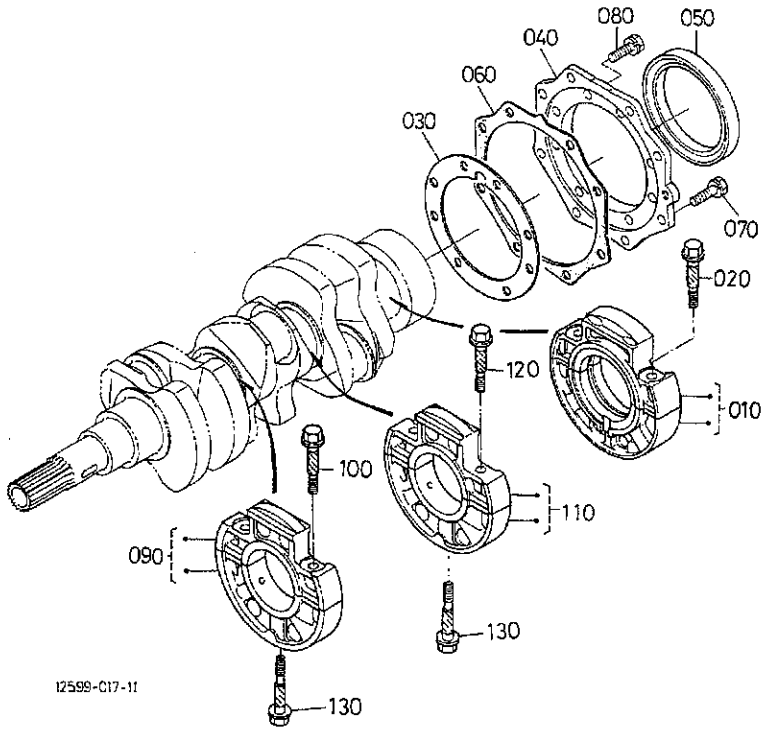

A:WG752-E2BBH

REF. No. PCS. No.	PART No. REFERENCE	PART NAME	DESIGNATION	Q'TY/S. No. Q'TE/No. S. A	B	I. C.	REMARKS REMARQUES
010	15841-0409-0	ASSY CASE, MAIN BRG.	ENS. PALIER VILEBREQ.	1	-		
020	15841-0454-0	BOLT, BEARING CASE	VIS DE VILEBREQUIN	2	-		
030	15852-0436-0	GASKET, BEARING CASE	JOINT CART. DE RLMT	1	-		
040	15841-0481-0	COVER, BEARING CASE	PORTE JOINT	1	-		
050	EG283-0446-0	SEAL, OIL	BAGUE JOINT	1	-		
060	15841-0482-2	GASKET	JOINT	1	-		
070	01023-50620	BOLT	VIS	8	-		
080	01023-50622	BOLT	VIS	8	-		
090	16851-0404-0	ASSY CASE, MAIN BRG.	ENS. PALIER VILEBREQ.	1	-		
100	15841-0454-0	BOLT, BEARING CASE	VIS DE VILEBREQUIN	2	-		
110	16861-0405-0	ASSY CASE, MAIN BRG.	ENS. PALIER VILEBREQ.	1	-		
120	15841-0454-0	BOLT, BEARING CASE	VIS DE VILEBREQUIN	2	-		
130	15841-0456-2	BOLT, BEARING CASE	VIS DE VILEBREQUIN	2	-		

↔ Interchangeable; ≠ not interchangeable; ← new for old; → old for new

0101 CAMSHAFT AND IDLE GEAR SHAFT
ARBRE A CAMES ET ARBRE DE PIGNON FOU

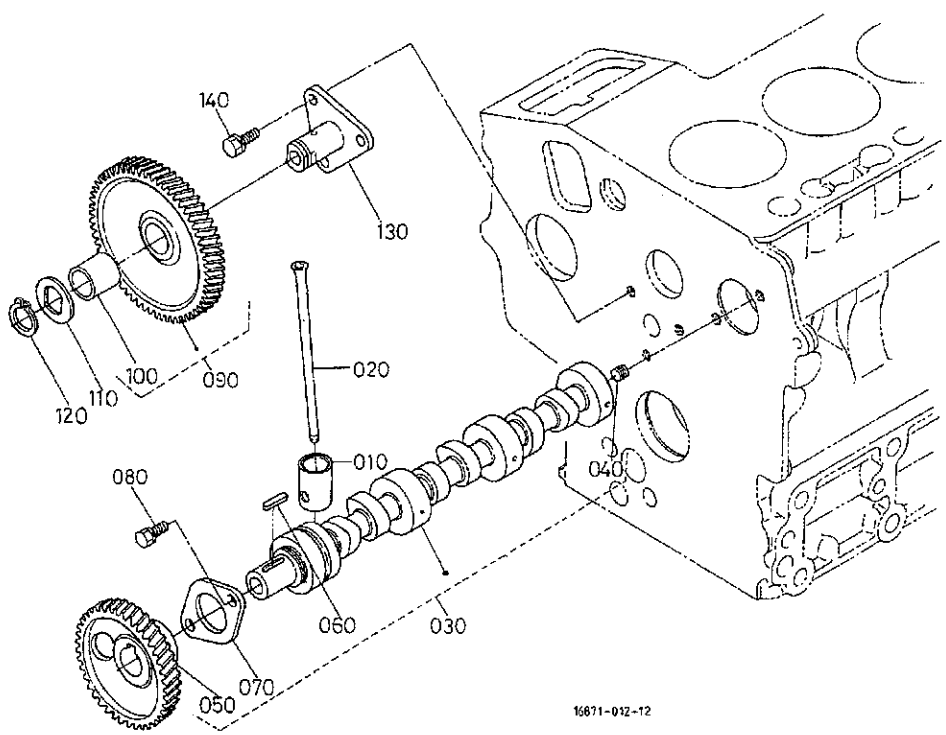

A:WG752-E2BBH

REF. No. PGS. No.	PART No. REFERENCE	PART NAME	DESIGNATION	Q'TY/S. No. Q'TE/No. S. A	B	I. C.	REMARKS REMARQUES
010	16851-1555-0	TAPPET	POUSSOIR	6	-		
020	16851-1511-0	PUSH ROD	TIGE DE POUSSOIR	6	-		
030	15861-1601-0	ASSY CAMSHAFT	ENS. ARBRE A CAMES	1	-		
040	15521-9361-0	SCREW, SET	VIS D'ARRET	1	-		
050	15841-1651-0	GEAR, CAMSHAFT	PIGNON D'ARBRE CAMES	1	-		
060	05712-00518	KEY, FEATHER	CLAVETTE	1	-		
070	15841-1627-0	STOPPER, CAMSHAFT	BOUCHON ARBRE A CAME	1	-		
080	01023-50612	BOLT	VIS	2	-		
090	15875-2401-3	COMP. GEAR, IDLE	PIGNON FOU COMP.	1	-		
100	15875-2428-2	BUSH	BAGUE	1	-		
110	15875-2437-0	COLLAR, IDLE GEAR	COLLIER DE PIGNONF.	1	-		
120	15875-2432-0	RING, SNAP	BAGUE ELASTIQUE	1	-		
130	15875-2425-0	SHAFT, IDLE GEAR	ARBRE DE PIGNON FOU	1	-		
140	01023-50614	BOLT	VIS	3	-		

↔ Interchangeable; ≠ not interchangeable; ← new for old; → old for new

0102 PISTON AND CRANKSHAFT
PISTONS ET VILEBREQUIN

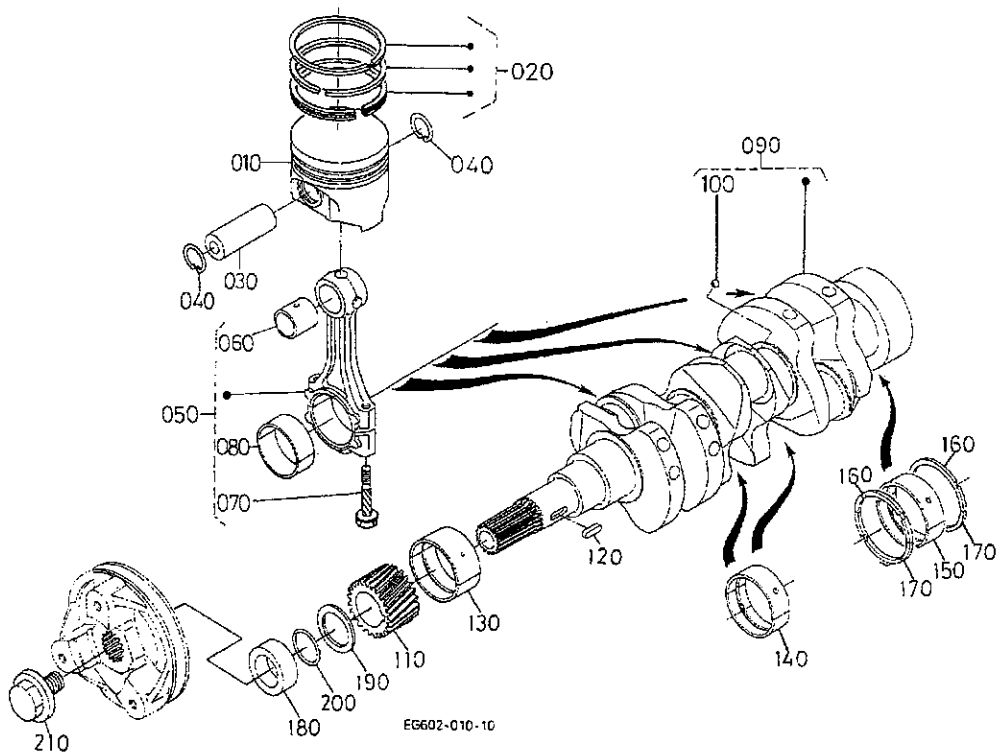

A:WG752-E2BBH

REF. No. PCS. No.	PART No. REFERENCE	PART NAME	DESIGNATION	Q'TY/S. No. Q'TE/No. S. A	B	I. C.	REMARKS REMARQUES
010	EG601-2111-0	PISTON	PISTON	3	-		STD
010	EG601-2191-0	PISTON	PISTON	3	-		+0. 5mm
020	12691-2105-3	ASSY PISTON RING	ENS. SEGMENT	3	-		STD
020	12691-2109-3	ASSY PISTON RING	ENS. SEGMENT	3	-		+0. 5mm
030	12581-2131-0	PIN, PISTON	AXE DE PISTON	3	-		
040	14601-2133-0	CIR CLIP, PISTON PIN	CIRCLIP	6	-		
050	15861-2201-0	ASSY CONNECTING ROD	ENS. BIELLE	3	-		
060	15841-2198-0	BUSH, PISTON PIN	BAGUE DE BIELLE	3	-		
070	16851-2214-0	BOLT, CONNECTING ROD	VIS DE BIELLE	6	-		
080	15861-2231-0	METAL, CRANKPIN	COUSSINET DE BIELLE	3	-		STD SET
080	15861-2297-0	METAL, CRANKPIN	COUSSINET DE BIELLE	3	-		-0. 2mm SET
080	15861-2298-0	METAL, CRANKPIN	COUSSINET DE BIELLE	3	-		-0. 4mm SET
090	16861-2301-0	COMP. CRANKSHAFT	VILEBREQUIN COMPLET	1	-		
100	07715-03207	BALL	BILLE	3	-		
110	15841-2411-0	GEAR, CRANK	PIGNON	1	-		
120	05712-00515	KEY, FEATHER	CLAVETTE	1	-		
130	15861-2347-0	METAL, CRANKSHAFT	COUSSINET DE VILEBR.	1	-		STD
130	15861-2391-0	METAL, CRANKSHAFT	COUSSINET DE VILEBR.	1	-		-0. 2mm
130	15861-2392-0	METAL, CRANKSHAFT	COUSSINET DE VILEBR.	1	-		-0. 4mm
140	15861-2348-0	METAL, CRANKSHAFT	COUSSINET DE VILEBR.	2	-		STD SET
140	15861-2386-0	METAL, CRANKSHAFT	COUSSINET DE VILEBR.	2	-		-0. 2mm SET
140	15861-2387-0	METAL, CRANKSHAFT	COUSSINET DE VILEBR.	2	-		-0. 4mm SET
150	15694-2348-0	METAL, CRANKSHAFT	COUSSINET DE VILEBR.	1	-		STD SET
150	15694-2393-0	METAL, CRANKSHAFT	COUSSINET DE VILEBR.	1	-		-0. 2mm SET
150	15694-2394-0	METAL, CRANKSHAFT	COUSSINET DE VILEBR.	1	-		-0. 4mm SET
160	15261-2353-0	METAL, SIDE	COUSSINET DE LATERAL	2	-		STD
160	15261-2395-0	METAL, SIDE	COUSSINET DE LATERAL	2	-		+0. 2mm
160	15261-2396-0	METAL, SIDE	COUSSINET DE LATERAL	2	-		+0. 4mm
170	15261-2354-0	METAL, SIDE	COUSSINET DE LATERAL	2	-		STD
170	15261-2397-0	METAL, SIDE	COUSSINET DE LATERAL	2	-		+0. 2mm

↔ Interchangeable; ≠ not interchangeable; ← new for old; → old for new

0102 PISTON AND CRANKSHAFT
PISTONS ET VILEBREQUIN

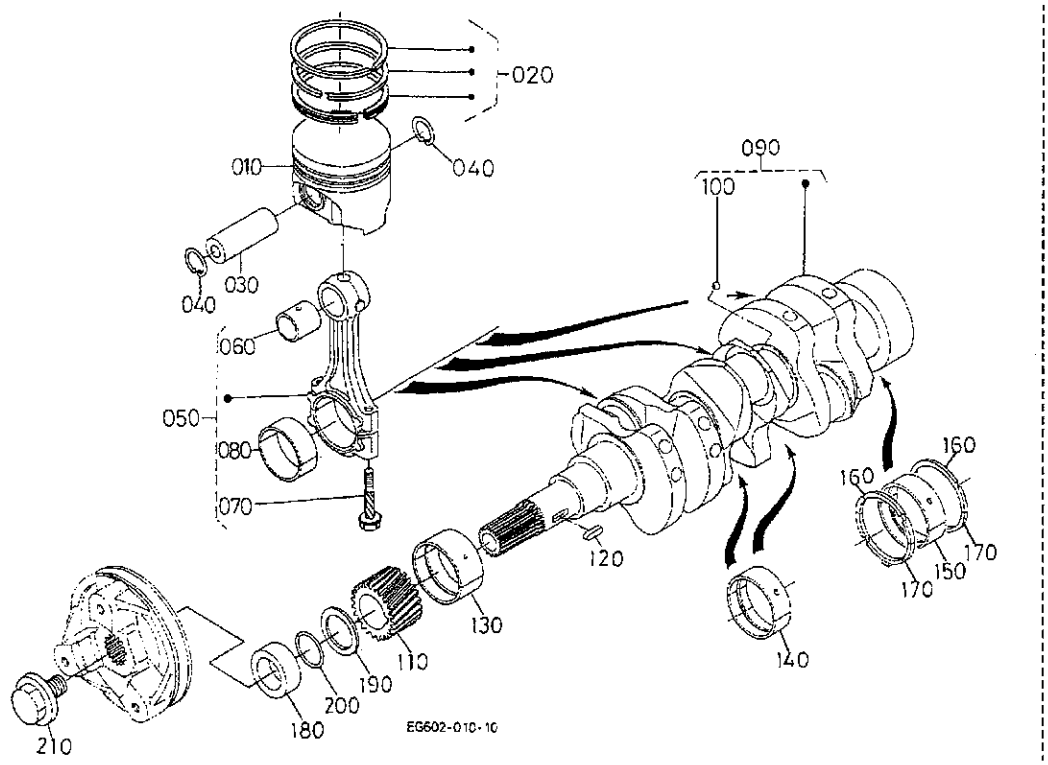

A:WG752-E2BBH

REF. No. PCS No.	PART No. REFERENCE	PART NAME	DESIGNATION	Q'TY/S. No. Q'TE/No. S. A	B	I. C.	REMARKS REMARQUES
170	15261-2398-0	METAL, SIDE	COUSSINET DE LATERAL	2	-		+0.4mm
180	15841-2325-0	COLLAR, CRANKSHAFT	COLLIER VILEBREQUIN	1	-		
190	15881-2331-0	SLINGER, OIL	DEFLECTEUR D'HUILE	1	-		
200	04814-16220	O RING	JOINT TORIQUE	1	-		
210	15881-9103-0	BOLT	VIS	1	-		

↔ Interchangeable; ≠ not interchangeable; ← new for old; → old for new

0103 FLYWHEEL
VOLANT MOTEUR

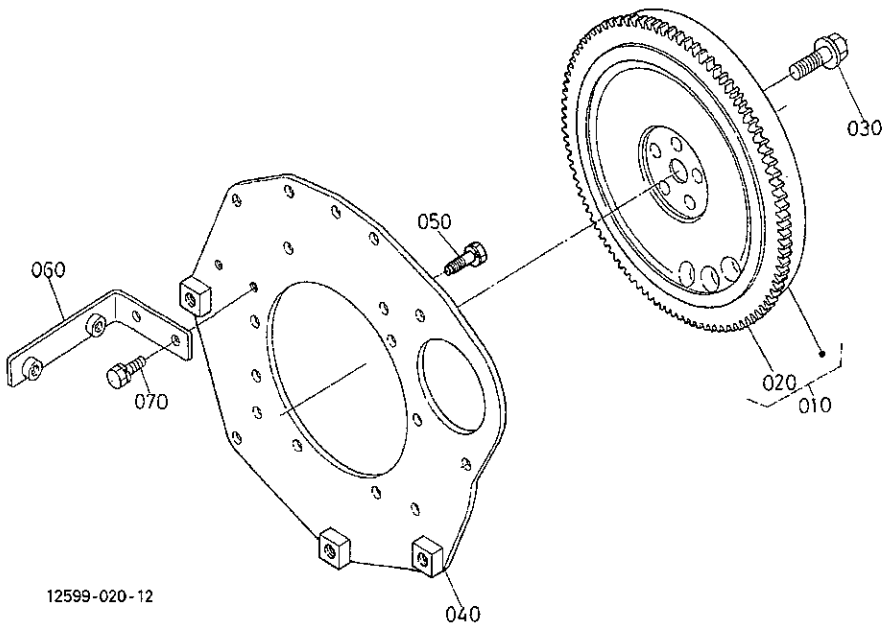

A:WG752-E2BBH

REF. No. POS. No.	PART No. REFERENCE	PART NAME	DESIGNATION	Q'TY/S. No. Q'TE/No. S. A	B	I. C.	REMARKS REMARQUES
010	16861-2501-4	COMP. FLYWHEEL	VOLANT MOTEUR COMP.	1	-		
020	16851-6382-2	GEAR, RING	COURONNE DE DEMARRE.	1	-		
030	15852-2516-0	BOLT, FLYWHEEL	VIS DE VOLANT	5	-		
040	12691-0462-0	PLATE, REAR END	PLAQUE ARRIERE-TRAIN	1	-		
050	01123-60816	BOLT	VIS	10 <=3ZI309	-		#
050	16871-9101-0	BOLT	VIS	10 >=4A0001	-	≠	#
060	12581-6885-0	SUPPORT, COVER	SUPPORT	1	-		
070	01023-50610	BOLT	VIS	2	-		

↔ Interchangeable; ≠ not interchangeable; ← new for old; → old for new

0105 FUEL CAMSHAFT
ARBRE A CAMES DE CARBURANT

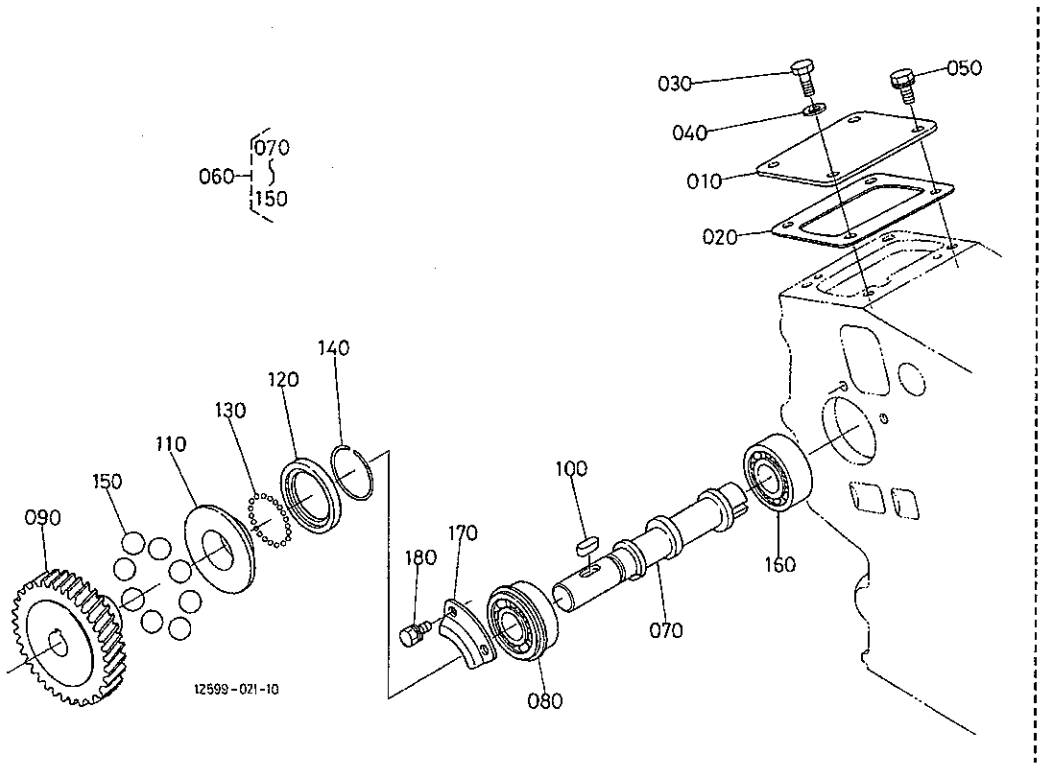

A:WG752-E2BBH

REF.No. POS.No.	PART No. REFERENCE	PART NAME	DESIGNATION	Q'TY/S.No. Q'TE/No.S. A	B	I.C.	REMARKS REMARQUES
010	12581-5165-0	COVER	COUVERCLE	1	-		
020	EG281-5166-0	GASKET	JOINT	1	-		
030	01053-50612	BOLT	VIS	1	-		
040	15601-9665-0	GASKET	JOINT	1	-		
050	01023-50614	BOLT	VIS	3	-		
060	12584-1603-0	ASSY SHAFT, DISTRIBU	ENS. ARBRE DE CONCES	1	-		
070	12584-1618-0	SHAFT, DISTRIBUTOR	ARBRE DE CONCESSION	1	-		
080	08153-06203	BEARING, BALL	ROULEMENT A BILLES	1	-		
090	15841-5115-0	GEAR, INJECTION PUMP	ENGRE. POMPE D'INJEC.	1	-		
100	05712-00515	KEY, FEATHER	CLAVETTE	1	-		
110	15841-5545-0	SLEEVE, GOVERNOR	BAGUE DE REGULATEUR	1	-		
120	15841-5569-0	CASE, GOVERNOR BALL	CUVETTE DE BILLES	1	-		
130	07715-00801	BALL	BILLE	32	-		
140	15261-5547-0	CIR-CLIP, GOV. SLEEVE	JONC D'ARRET	1	-		
150	07715-03217	BALL	BILLE	8	-		
160	08103-06203	BEARING, BALL	ROULEMENT A BILLES	1 <=3Z1309	-		#
160	16871-9730-0	BEARING, BALL	ROULEMENT A BILLES	1 >=4A0001	-	↔	#
170	15841-1632-0	STOPPER, FUEL. C/SHAFT	BOUCHON	1	-		
180	01023-50612	BOLT	VIS	2	-		

↔ Interchangeable; ≠ not interchangeable; ← new for old; → old for new

0200 GOVERNOR LEVER
LEVIER DE REGULAT

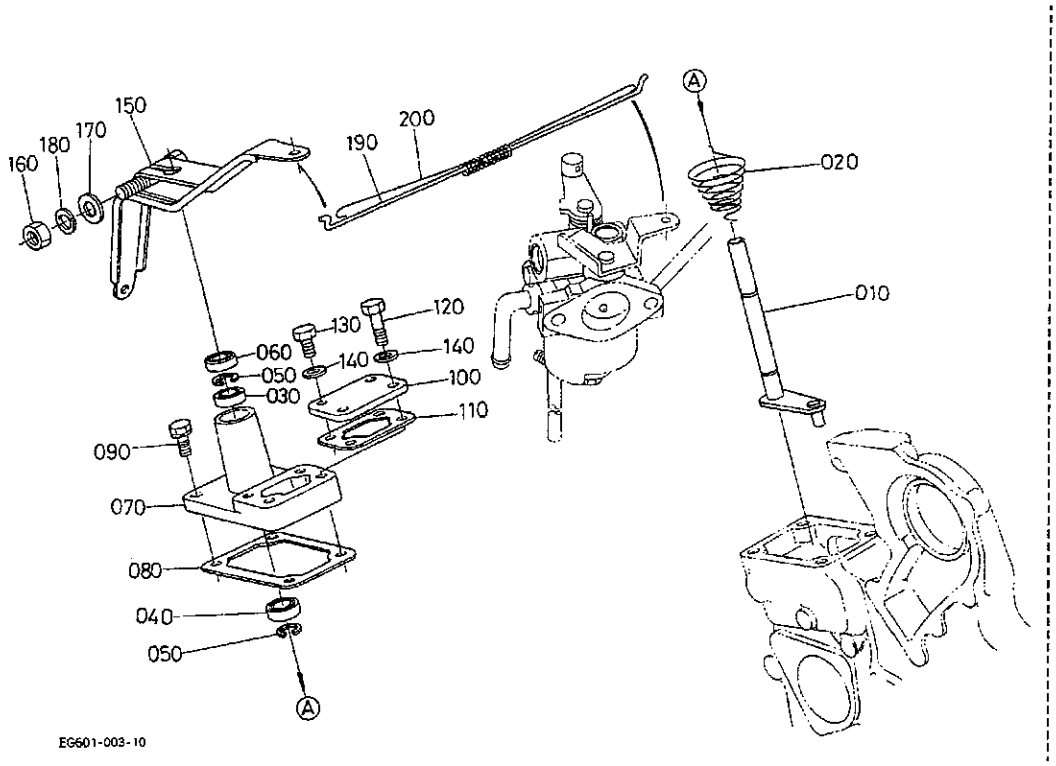

A:WG752-E2BBH

REF. No. PCS. No.	PART No. REFERENCE	PART NAME	DESIGNATION	Q'TY/S. No. Q'TE/No. S. A	B	I. C.	REMARKS REMARQUES
010	12581-5610-0	COMP LEVER, GOVERNOR	LEVIER DE REGULATEUR	1	-		
020	12581-5587-0	SPRING, GOVERNOR LEVR	RESSORT REGUL-LEVIER	1	-		
030	EG283-5581-0	BEARING	ROULEMENT	1	-		
040	EG283-5582-0	BEARING	ROULEMENT	1	-		
050	12581-5583-0	CIR-CLIP	CIRCLIP	2	-		
060	12581-5585-0	SEAL, OIL	BAGUE JOINT	1	-		
070	12581-5631-0	SUPPORT, GOV. L. SHAFT	SUPPORT DE ARBRE	1	-		
080	15841-5721-2	GASKET, CONTROL PLATE	JOINT, PLAQUE CONTR.	1	-		
090	01023-50618	BOLT	VIS	2	-		
100	12581-5633-0	COVER	COUVERCLE	1	-		
110	EG281-5634-0	GASKET	JOINT	1	-		
120	01053-50622	BOLT	VIS	2	-		
130	01053-50612	BOLT	VIS	2	-		
140	15601-9665-0	GASKET	JOINT	4	-		
150	EG294-5611-0	LEVER, GOVERNOR	LEVIER DE REGULAT.	1	-		
160	02156-50080	NUT	ECROU	1	-		
170	04013-60080	WASHER, PLAIN	RONDELLE FREIN	1	-		
180	04512-60080	WASHER, SPRING	RONDELLE GROWER	1	-		
190	12581-5635-0	ROD, GOVERNOR CON/ROD	TIGE DE REGULATEUR	1	-		
200	12581-5639-0	SPRING	RESSORT	1	-		

↔ Interchangeable; ≠ not interchangeable; ← new for old; → old for new

0201 FUEL FILTER
FILTRE A CARBURANT

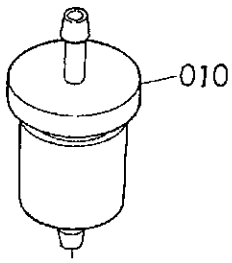

12691-010-10

A:WG752-E2BBH

REF. No. POS. No.	PART No. REFERENCE	PART NAME	DESIGNATION	Q' TY/S. No. Q' TE/No. S. A	B	I. C.	REMARKS REMARQUES
010	12581-4301-2	ASSY FILTER, FUEL	ENS. FILTRE, COMBUST	1	-		

↔ Interchangeable; ≠ not interchangeable; ← new for old; → old for new

0202 CARBURETTOR CARBURATEUR

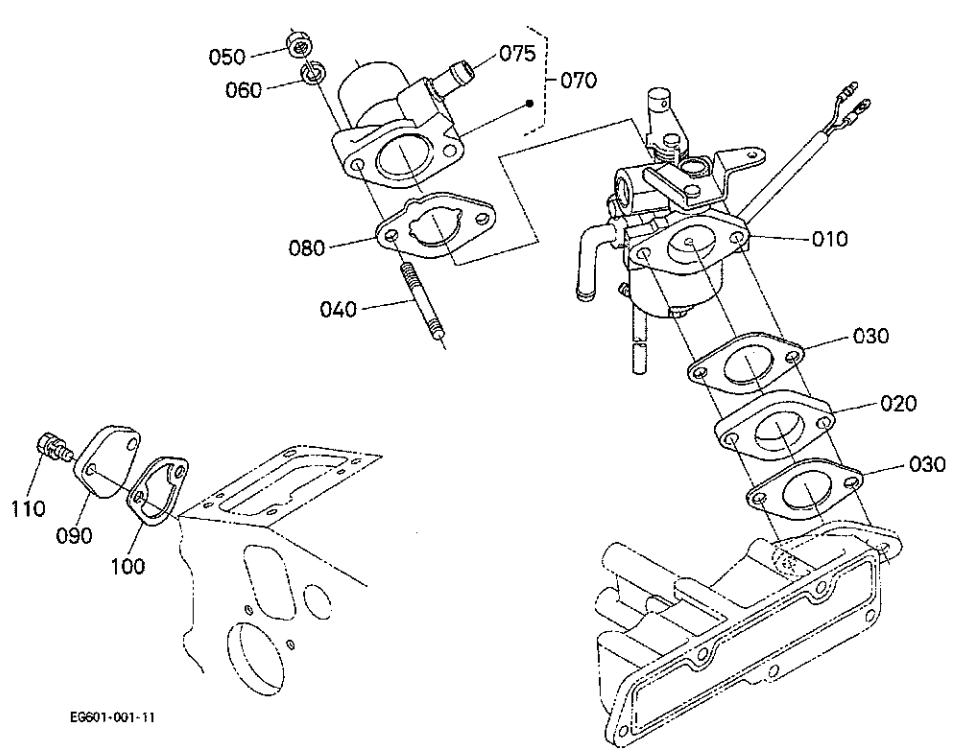

A:WG752-E2BBH

REF. No. PCS. No.	PART No. REFERENCE	PART NAME	DESIGNATION	Q'TY/S. No. Q'TE/No. S. A	B	I. C.	REMARKS REMARQUES
010	EG601-4401-0	ASSY CARBURETTOR	ENS. CARBURATEUR	1	-		
020	12596-4615-0	FLANGE, CARBURETTOR	FLASQUE CARBURATEUR	1	-		
030	12035-4611-0	GASKET, CARBURETOR. NA	JOINT DE CARBURATEUR	2	-		
040	EG261-9149-0	STUD	GOUJON	2	-		
050	02156-50080	NUT	ECROU	2	-		
060	04512-60080	WASHER, SPRING	RONDELLE GROWER	2	-		
070	EG261-1160-3	FLANGE, AIR CLEANER	FLASQUE FILTRE A AIR	1	-		
075	EG261-7337-2	JOINT	RACCORD	1	-		
080	EG261-1151-0	GASKET, AIR CLEANER	JOINT D'AIR FILTRE	1	-		
090	15852-5285-0	COVER	COUVERCLE	1	-		
100	16264-5214-0	GASKET, FUEL PUMP	JOINT DE POMP. CARB.	1	-		
110	01023-50616	BOLT	VIS	2	-		

↔ Interchangeable; ≠ not interchangeable; ← new for old; → old for new

0204 FORK LEVER
LEVIER A FOURCHE

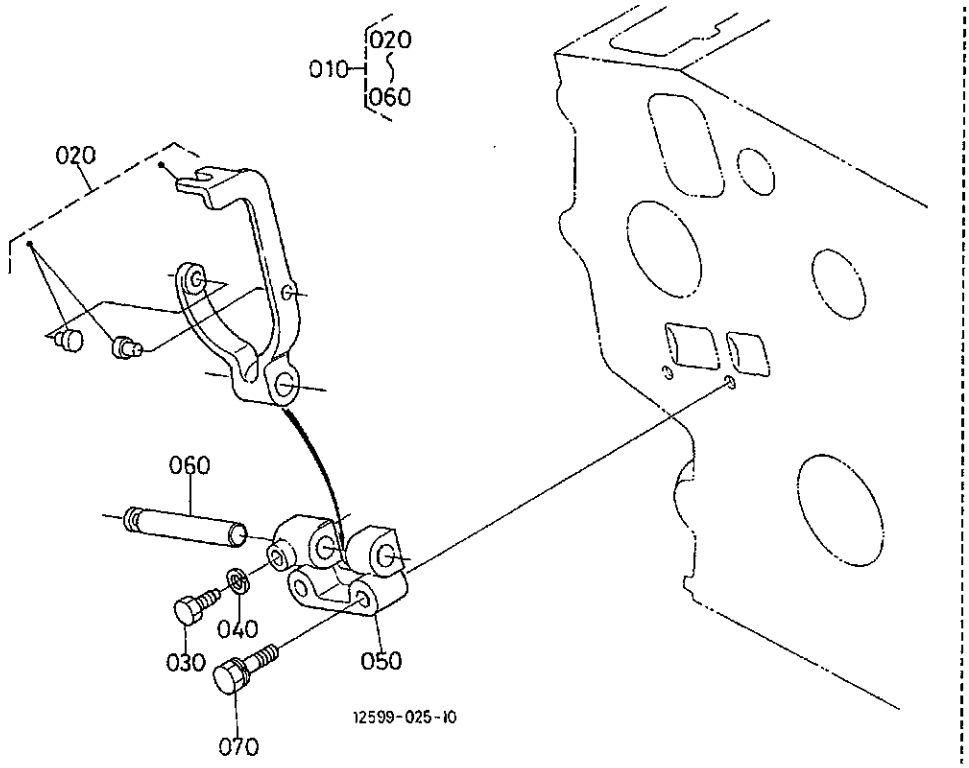

A:WG752-E2BBH

REF. No. PCS. No.	PART No. REFERENCE	PART NAME	DESIGNATION	Q'TY/S. No. Q'TE/No. S. A	B	I. C.	REMARKS REMARQUES
010	12581-5605-0	ASSY LEVER, FORK	ENS. LEVIER A FOURCHE	1	-		
020	12581-5604-0	COMP. LEVER, FORK	LEVIER DE REGULATEUR	1	-		
030	15261-6641-0	BOLT	VIS	1	-		
040	04512-60050	WASHER, SPRING	RONDELLE GROWER	1	-		
050	15841-5623-0	HOLDER, FORK LEVER	SUPP. FOUR-LEVIER	1	-		
060	12581-5615-0	SHAFT, FORK LEVER	ARBRE DE FOUR-LEVIER	1	-		
070	01023-50635	BOLT	VIS	2	-		

↔ Interchangeable; ≠ not interchangeable; ← new for old; → old for new

0205 SPEED CONTROL LEVER
LEVIER DE VIT-CONTROLE

#

REV. SEPT. 20 '01

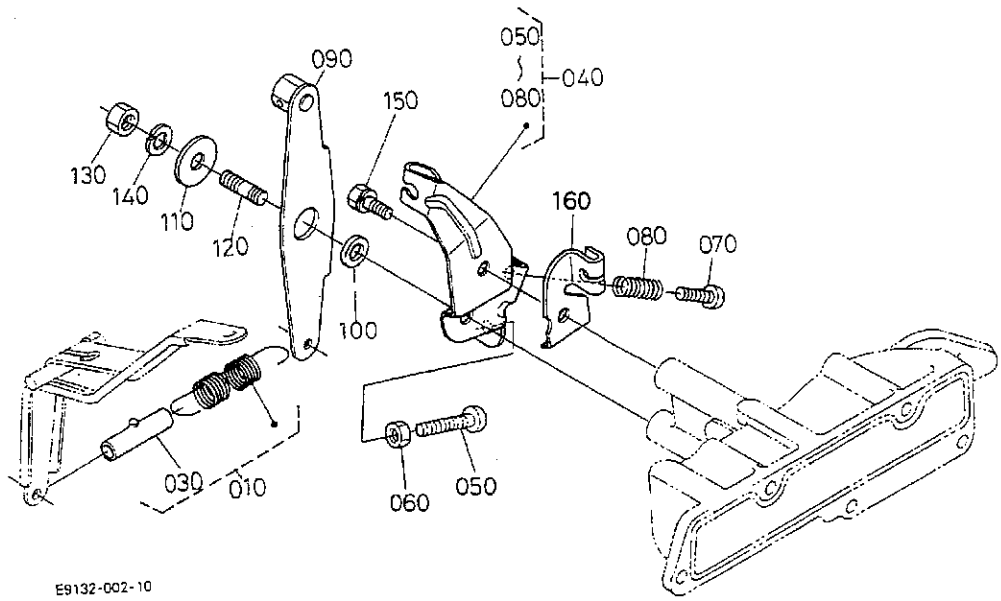

A:WG752-E2BBH

REF. No. PCS. No.	PART No. REFERENCE	PART NAME	DESIGNATION	Q'TY/S. No. Q'TE/No. S. A	B	I. C.	REMARKS REMARQUES
010	EG266-5640-0	ASSY SPRING, GOVERNOR	ENS. RESSORT REGULATR	1	-		
020	----	BLANK	BLANC	-	-		
030	12691-5643-0	CUSHION	COUSSIN	1	-		
040	12581-5701-0	ASSY PLATE, CONTROL	PLATEAU DE COMMANDE	1	-		
050	12182-9331-0	SCREW	VIS	1	-		
060	02014-50060	NUT	ECROU	1	-		
070	12182-9341-0	SCREW	VIS	1	-		
080	13641-5686-0	SPRING	RESSORT	1	-		
090	12581-5704-0	COMP LEVER, SP-CONT	LEVIER COMP	1	-		
100	12581-5724-0	COLLAR	COLLIER	1	-		
110	04015-60080	WASHER, PLAIN	RONDELLE FREIN	1	-		
120	01518-50820	STUD	GOUJON	1	-		
130	02156-50080	NUT	ECROU	1	-		
140	04512-60080	WASHER, SPRING	RONDELLE GROWER	1	-		
150	01023-50614	BOLT	VIS	1	-		
160	12599-4681-0	HOLDER, CHOKE WIRE	SUPPORT FIL D'ENTRA	1	-		

↔ Interchangeable; ≠ not interchangeable; ← new for old; → old for new

0300 SPARK PLUG AND DISTRIBUTOR
BOUGIE ALLUMAGE ET DISTRIBUTEUR

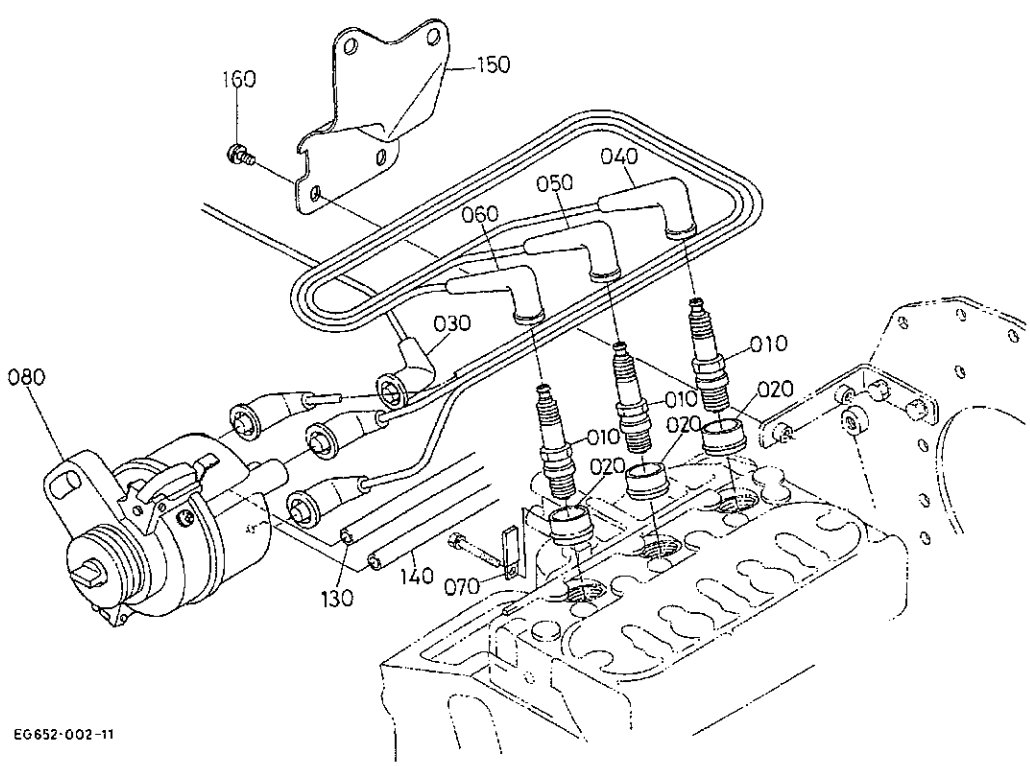

A:WG752-E2BBH

REF. No. PCS. No.	PART No. REFERENCE	PART NAME	DESIGNATION	Q'TY/S. No. Q'TE/No. S. A	B	I. C.	REMARKS REMARQUES
010	12599-6771-0	SPARK PLUG	BOUGIE ALLUMAGE	3	-		
020	EG283-6772-0	CAP, SPARK PLUG	CAPSULE DE BOUGIE	3	-		
030	12691-6751-0	ASSY CORD, CENTER	ENS. CORDON CENTRE	1	-		
040	EG601-6752-0	ASSY CORD, PLUG	ENS. CORDON DE FICHE	1 <=2L7462	-		
040	EG601-6752-2	ASSY CORD, PLUG	ENS. CORDON DE FICHE	1 >=2N0001	-	←	
050	EG601-6753-0	ASSY CORD, PLUG	ENS. CORDON DE FICHE	1 <=2L7462	-		
050	EG601-6753-2	ASSY CORD, PLUG	ENS. CORDON DE FICHE	1 >=2N0001	-	←	
060	EG601-6754-0	ASSY CORD, PLUG	ENS. CORDON DE FICHE	1 <=2L7462	-		
060	EG601-6754-2	ASSY CORD, PLUG	ENS. CORDON DE FICHE	1 >=2N0001	-	←	
070	15272-6759-0	CLAMP, CORD	ATTACHE-FILS	1	-		
080	EG283-6880-0	ASSY DISTRIBUTOR, AIR	ENS. DISTRIBUTEUR	1	-		
090	----	BLANK	BLANC	-	-		
100	----	BLANK	BLANC	-	-		
110	----	BLANK	BLANC	-	-		
120	----	BLANK	BLANC	-	-		
130	12581-6882-0	PIPE	TUYAU	1	-		
140	EG283-6883-0	PIPE	TUYAU	1	-		
150	12691-6884-0	COVER	COUVERCLE	1	-		
160	03034-50510	SCREW, WITH WASHER	VIS	4	-		

↔ Interchangeable; ≠ not interchangeable; ← new for old; → old for new

0301 DISTRIBUTOR (COMPONENT PARTS)
DISTRIBUTEUR (PARTIES COMPOSANTES)

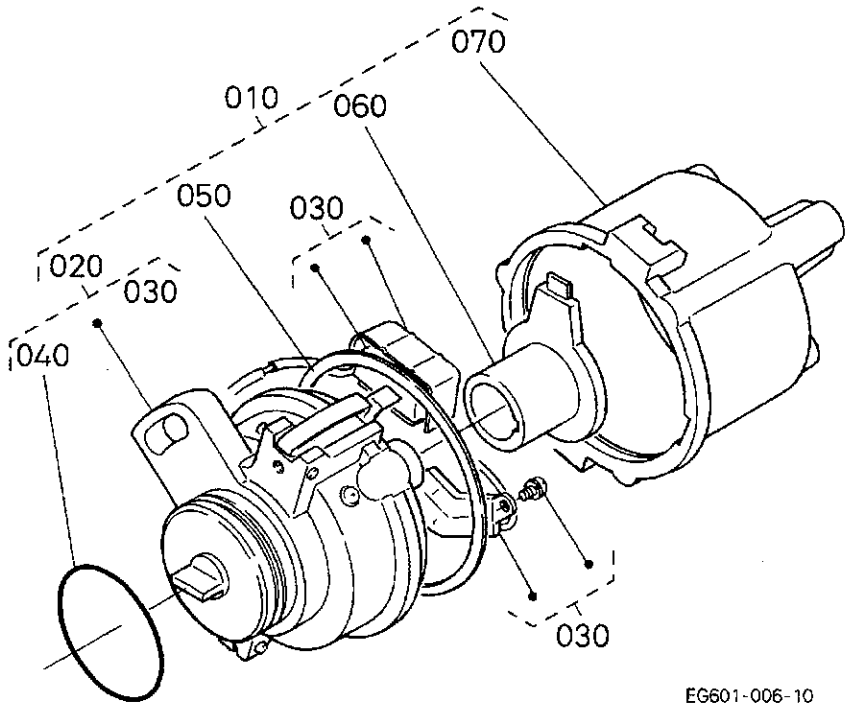

A:WG752-E2BBH

REF. No. PCS. No.	PART No. REFERENCE	PART NAME	DESIGNATION	Q'TY/S. No. Q'TE/No. S. A	B	I. C.	REMARKS REMARQUES
010	EG283-6880-0	ASSY DISTRIBUTOR, AIR	ENS. DISTRIBUTEUR	1	-		
020	12581-6850-0	KIT HOUSING	ENS. CARTE	1	-		
030	12581-6860-0	ASSY IGNITER	ENS. ALLMEUR	1	-		
040	12581-6851-0	O RING	JOINT TORIQUE	1	-		
050	12581-6863-0	GASKET	JOINT	1	-		
060	EG283-6865-0	ASSY ROTOR	ENS. ROTOR	1	-		
070	12581-6867-0	ASSY CAP	BOUCHON	1	-		

↔ Interchangeable; ≠ not interchangeable; ← new for old; → old for new

0302 IGNITION COIL
BOBINE D'ALLUMAGE

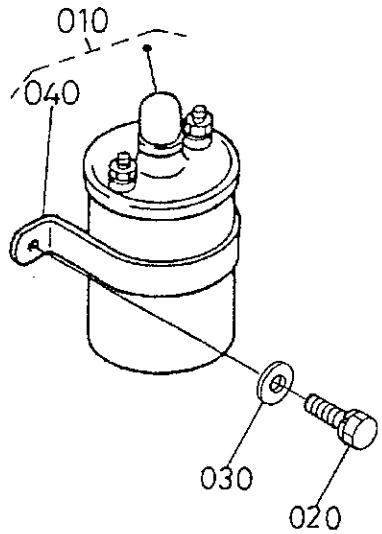

12691-016-12

A:WG752-E2BBH

REF. No. PCS. No.	PART No. REFERENCE	PART NAME	DESIGNATION	Q'TY/S. No. Q'TE/No. S. A	B	I. C.	REMARKS REMARQUES
010	12581-6890-0	COIL, IGNITION	BOBINE D'ALLUMAGE	1	-		
020	01123-60816	BOLT	VIS	2	-		
030	04013-60080	WASHER, PLAIN	RONDELLE FREIN	2	-		
040	12581-6892-0	BRACKET	SUPPORT	1	-		

↔ Interchangeable; ≠ not interchangeable; ← new for old; → old for new

0400 DYNAMO AND PULLEY
DYNAMO

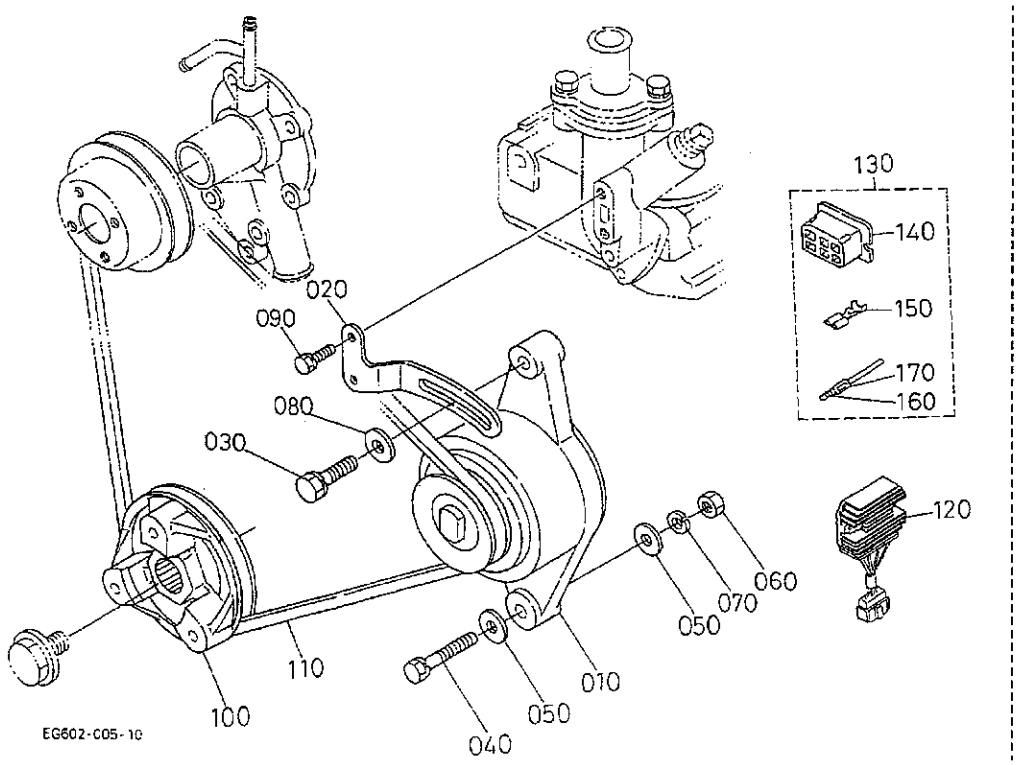

A:WG752-E2BBH

REF. No. PCS. No.	PART No. REFERENCE	PART NAME	DESIGNATION	Q'TY/S. No. Q'TE/No. S. A	B	I. C.	REMARKS REMARQUES
010	15531-6401-6	ASSY DYNAMO	ALTERNATEUR COMPLET	1	-		14V 12.5A
020	12599-6442-0	STAY, DYNAMO	TENDEUR	1	-		
030	01123-50830	BOLT	VIS	1	-		
040	01153-50855	BOLT	VIS	1	-		
050	04013-60080	WASHER, PLAIN	RONDELLE FREIN	2	-		
060	02156-50080	NUT	ECROU	1	-		
070	04512-60080	WASHER, SPRING	RONDELLE GROWER	1	-		
080	04015-60080	WASHER, PLAIN	RONDELLE FREIN	1	-		
090	01023-50616	BOLT	VIS	2	-		
100	16861-7428-0	PULLEY, FAN DRIVE	POULIE ENTRAIN. VENT.	1	-		
110	15881-9701-0	V BELT	COURROIE	1	-		34.5IN
120	RP201-5371-0	ASSY REGULATOR	REGULATEUR	1	-		
130	19428-6583-0	ASSY COUPLER	ENS. COUPLEUR	1	-		
140	19237-6588-0	CONNECTOR	CONNECTEUR	1	-		
150	19237-6591-0	TERMINAL	DEBORNE	6	-		
160	68271-6591-0	TERMINAL	DEBORNE	2	-		
170	68271-6592-0	SLEEVE	MANCHON	2	-		

↔ Interchangeable; ≠ not interchangeable; ← new for old; → old for new

0401 DYNAMO (COMPONENT PARTS)
DYNAMO (PARTIES COMPOSANTES)

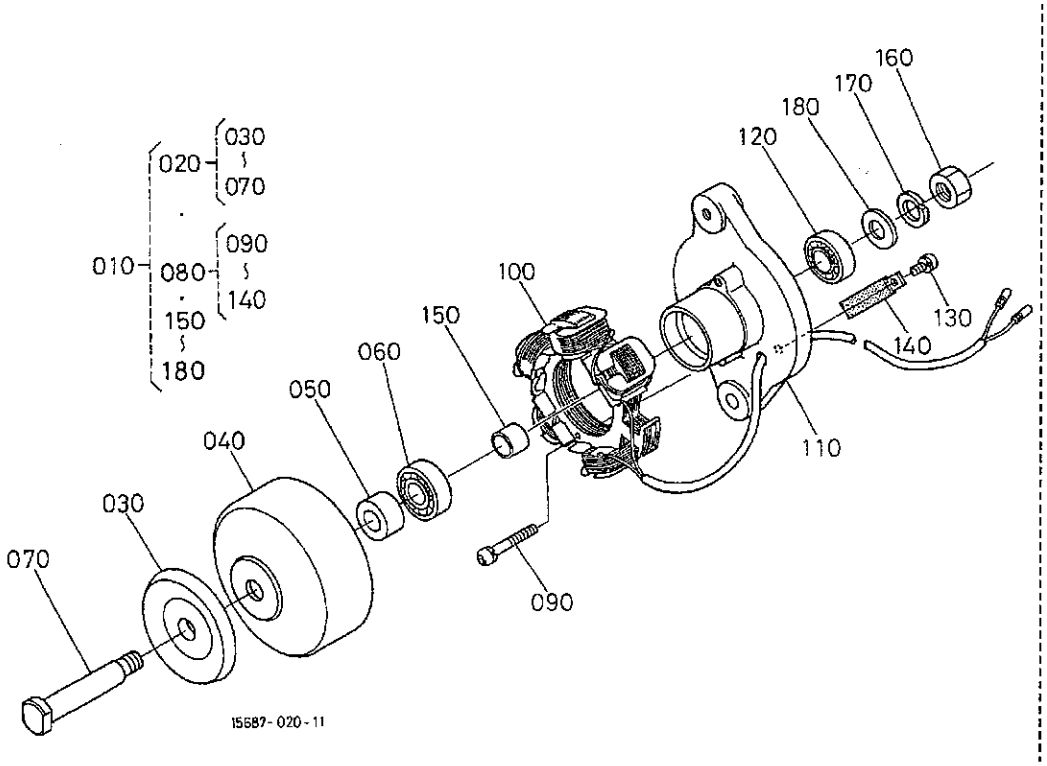

A:WG752-E2BBH

REF. No. PCS No.	PART No. REFERENCE	PART NAME	DESIGNATION	Q'TY/S. No. Q'TE/No. S. A	B	I. C.	REMARKS REMARQUES
010	15531-6401-6	ASSY DYNAMO	ALTERNATEUR COMPLET	1	-		
020	15381-6412-0	COMP. FLYWHEEL	VOLANT MOTEUR COMP.	1	-		
030	15531-6411-0	PULLEY	POULIE	1	-		
040	15381-6404-0	FLYWHEEL	VOLANT DU MOTEUR	1	-		
050	6C040-8286-0	COLLAR	COLLIER	1	-		
060	15531-7418-0	BEARING, BALL	ROULEMENT A BILLES	1	-		
070	15381-7414-0	SHAFT, FAN	ARBRE DE VENTIL.	1	-		
080	15381-6436-0	COMP. STATOR	STATOR COMPLET	1	-		
090	15261-9301-0	SCREW, ROUND HEAD	VIS A TETE RONDE	2	-		
100	15381-6429-0	STATOR	STATOR	1	-		
110	15381-6407-0	PLATE	PLAQUE	1	-		
120	15531-7418-0	BEARING, BALL	ROULEMENT A BILLES	1	-		
130	15531-9301-0	SCREW, ROUND HEAD	VIS A TETE RONDE	1	-		
140	15381-6419-0	CLAMP, CORD	ATTACHE-FILS	1	-		
150	15381-6415-0	COLLAR	COLLIER	1	-		
160	15261-9203-0	NUT	ECROU	1	-		
170	15261-9407-0	WASHER, SPRING	RONDELLE GROWER	1	-		
180	15261-9402-0	WASHER, PLAIN	RONDELLE FREIN	1	-		

↔ Interchangeable; ≠ not interchangeable; ← new for old; → old for new

0404 STARTER DEMARREUR

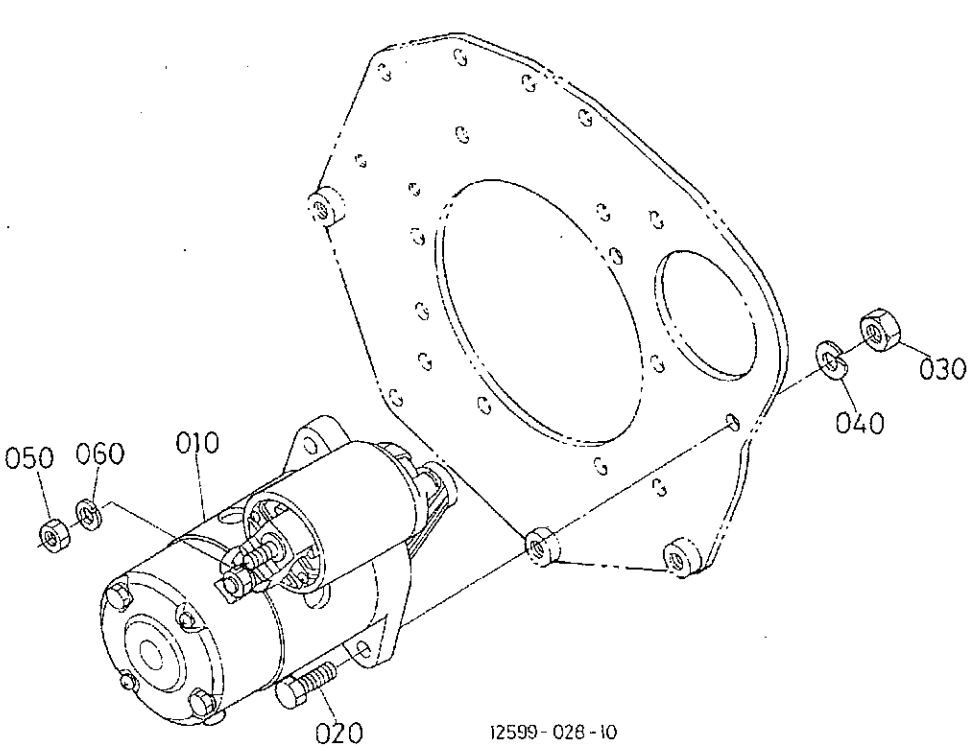

A:WG752-E2BBH

REF. No. PCS. No.	PART No. REFERENCE	PART NAME	DESIGNATION	Q'TY/S. No. Q'TE/No. S. A	B	I. C.	REMARKS REMARQUES
010	15852-6301-0	ASSY STARTER	ENS. DEMARREUR	1	-		12V, 0.7kW
020	01153-50828	BOLT	VIS	2	-		
030	02156-50080	NUT	ECROU	2	-		
040	04512-60080	WASHER, SPRING	RONDELLE GROWER	2	-		
050	02156-50080	NUT	ECROU	1	-		
060	04512-60080	WASHER, SPRING	RONDELLE GROWER	1	-		

↔ Interchangeable; ≠ not interchangeable; ← new for old; → old for new

0405 STARTER (COMPONENT PARTS)
DEMARREUR (PARTIES COMPOSANTES)

#

REV. SEPT. 20 '01

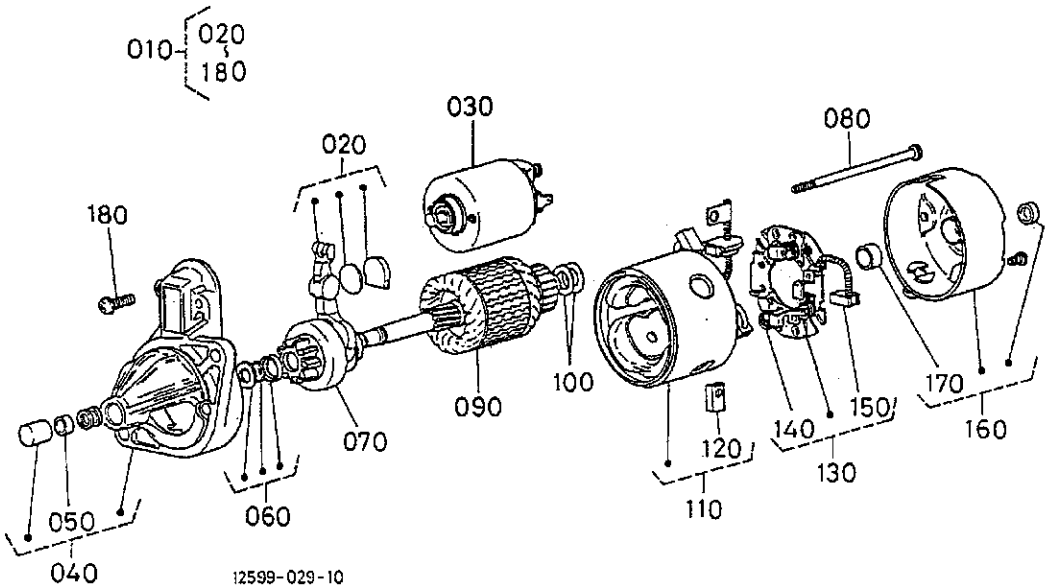

A:WG752-E2BBH

REF. No. PCS. No.	PART No. REFERENCE	PART NAME	DESIGNATION	Q'TY/S. No. Q'TE/No. S. A	B	I. C.	REMARKS REMARQUES
010	15852-6301-0	ASSY STARTER	ENS. DEMARREUR	1	-		
020	15852-6305-0	LEVER, DRIVE	LEVIER D'ENTRAINEM.	1	-		
030	15852-6302-0	SWITCH, MAGNETIC	INTERRUP. MAGNETIQUE	1	-		
040	15852-6303-0	FRAME, DRIVE END	BATI	1	-		
050	15852-6324-0	BUSH	BAGUE	1	-		
060	19837-6315-0	STOPPER	POINTEAU D'ARRET	1	-		
070	15852-6304-0	CLUTCH, OVER RUNNING	EMBRAYAGE A INERTIE	1	-		
080	15852-6332-0	BOLT	VIS	2	-		
090	15852-6307-0	ARMATURE	ARMATURE	1	-		
100	15852-6341-0	WASHER, ADJUSTING	RONDELLE DE REGLAGE	1	-		
110	15852-6308-0	YOKE	FOURCHE	1	-		
120	15852-6336-0	BRUSH	PATTE D'ATTACHE	2	-		
130	15852-6338-0	HOLDER, BRUSH	PORTE-BALAI	1	-		
140	15852-6339-0	SPRING, BRUSH	RESSORT DE BALAI	3	-		
150	15852-6337-0	BRUSH	PATTE D'ATTACHE	1	-		
160	15852-6320-0	FRAME, END	BATI	1	-		
170	15852-6325-0	BUSH	BAGUE	1	-		
180	15852-9331-0	SCREW, PAN-HEAD	VIS	1	-		

↔ Interchangeable; ≠ not interchangeable; ← new for old; → old for new

0406 OIL SWITCH/THERMOMETER AND PLUG
CONTACT A HUILE THERMOMETRE ET OBTURATEUR

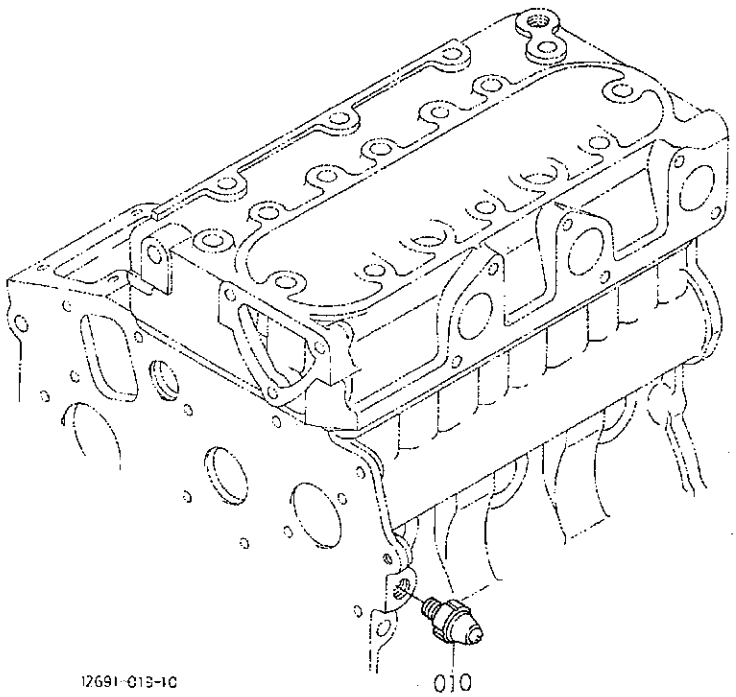

A:WG752-E2BBH

REF. No. PCS. No.	PART No. REFERENCE	PART NAME	DESIGNATION	Q'TY/S. No. Q'TE/No. S. A	B	I. C.	REMARKS REMARQUES
010	15841-3901-0	SWITCH, OIL	MANO-CONTACT D'HUILE	1			

↔ Interchangeable; ≠ not interchangeable; ← new for old; → old for new

0500 WATER FLANGE AND THERMOSTAT
BRIDE ET THERMOSTAT

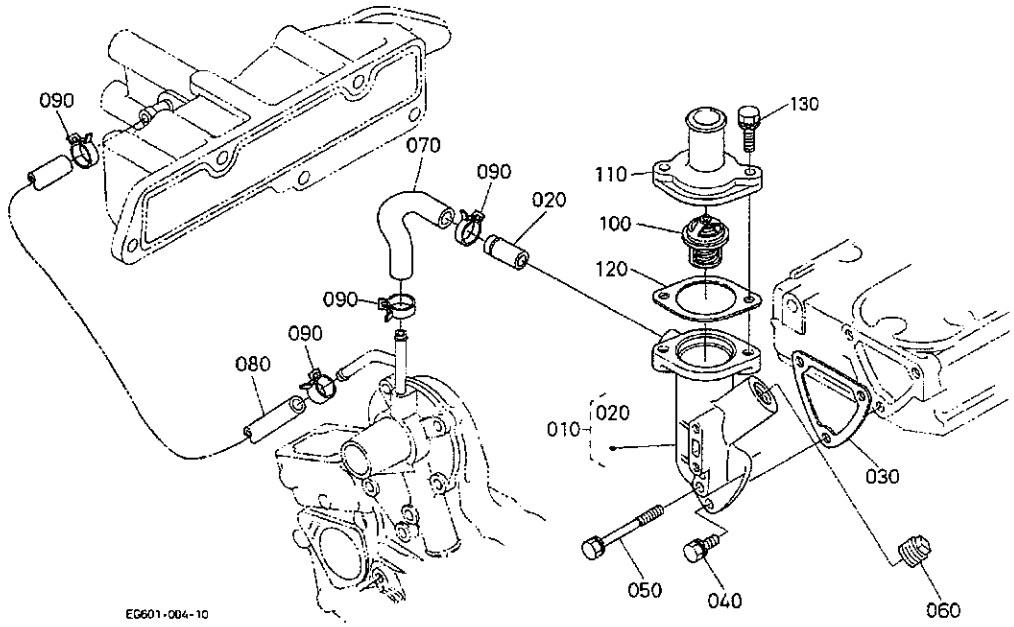

A:WG752-E2BBH

REF. No. PCS. No.	PART No. REFERENCE	PART NAME	DESIGNATION	Q'TY/S. No. Q'TE/No. S. A	B	I. C.	REMARKS REMARQUES
010	16873-7270-4	COMP. FLANGE, WATER	ENS. BRIDE A EAU	1	-		
020	16241-7337-0	PIPE, WATER RETURN	TUYAU RETOUR D'EAU	1	-		
030	15841-7292-2	GASKET, WATER FLANGE	JOINT DE BRIDE	1 <=3G9271	-		
030	15841-7292-3	GASKET, WATER FLANGE	JOINT DE BRIDE A EAU	1 >=3J0001	-	←	
040	01023-50616	BOLT	VIS	2	-		
050	01023-60650	BOLT	VIS	1	-		
060	19298-9602-0	PLUG	BOUCHON	1	-		
070	12691-7335-0	PIPE, WATER RETURN	TUYAU RETOUR D'EAU	1	-		
080	EG601-7337-0	PIPE, WATER RETURN	TUYAU RETOUR D'EAU	1	-		
090	16241-7336-0	BAND, PIPE	COLLIER DE TUYAU	4	-		
100	15531-7301-0	ASSY THERMOSTAT	THERMOSTAT COMP.	1	-		
110	15841-7326-0	COVER, THERMOSTAT	COUV. DE THERMOSTAT	1	-		
120	16851-7327-0	GASKET, THERMOSTAT	JOINT PLAT	1	-		
130	01023-50622	BOLT	VIS	2	-		

↔ Interchangeable; ≠ not interchangeable; ← new for old; → old for new

0501 WATER PUMP
POMPE A EAU

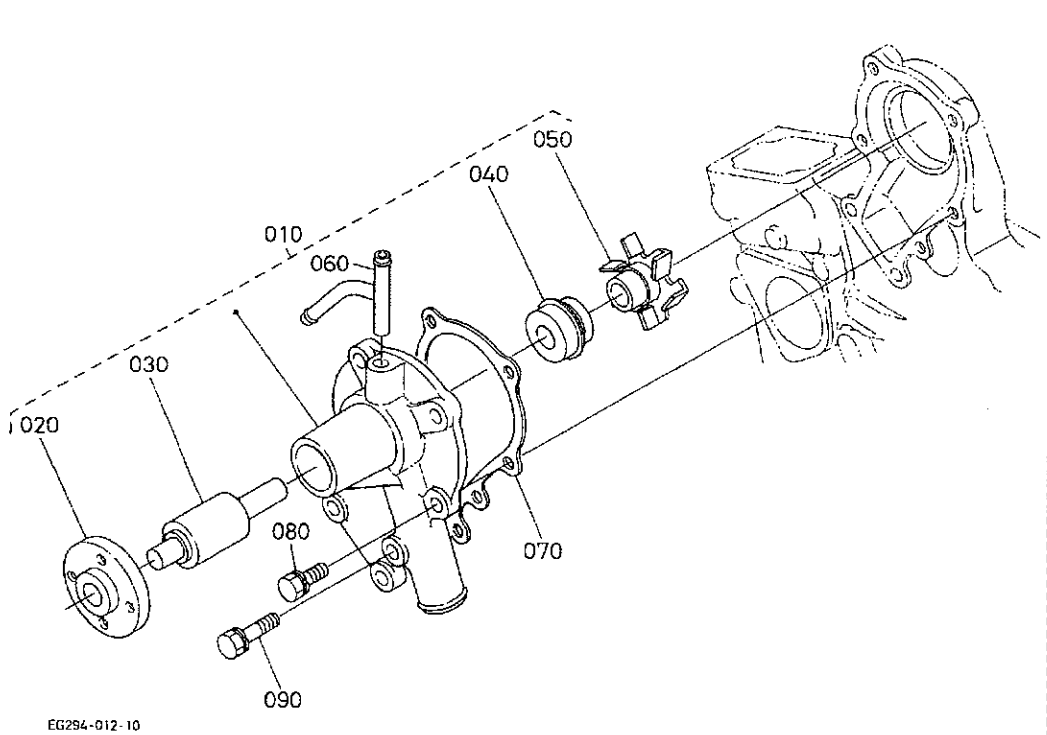

A:WG752-E2BBH

REF. No. PCS. No.	PART No. REFERENCE	PART NAME	DESIGNATION	Q'TY/S. No. Q'TE/No. S. A	B	I. C.	REMARKS REMARQUES
010	EG601-7303-0	ASSY PUMP, WATER	ENS. POMPE A EAU	1	-		
020	15852-7352-0	FLANGE, WATER PUMP	BRIDE DE POMPE A EAU	1	-		
030	15852-7355-0	BEARING	ROULEMENT	1	-		
040	15481-7305-0	ASSY SEAL, MECHANICAL	ENS. JOINT MECANIQUE	1	-		
050	19883-7351-0	IMPELLER, WATER PUMP	TURBINE DE POMPE	1	-		
060	EG601-7334-0	PIPE, WATER RETURN	TUYAU RETOUR D'EAU	1	-		
070	15881-7343-2	GASKET, WATER PUMP NA	JOINT DE POMPE A EAU	1	-		
080	01023-50622	BOLT	VIS	4	-		
090	01023-50638	BOLT	VIS	1	-		

↔ Interchangeable; ≠ not interchangeable; ← new for old; → old for new

0503 WATER PIPE
TUYAU D'EAU

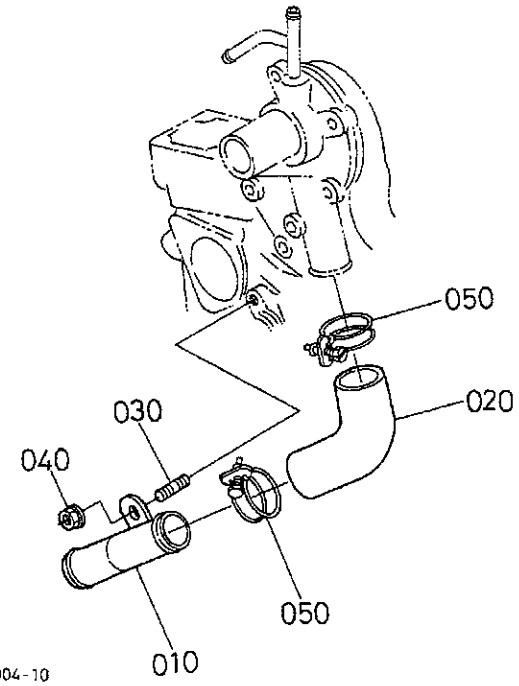

A:WG752-E2BBH

REF. No. PCS. No.	PART No. REFERENCE	PART NAME	DESIGNATION	Q'TY/S. No. Q'TE/No. S. A	B	I. C.	REMARKS REMARQUES
010	15841-7286-0	PIPE, WATER	TUYAU D'EAU	1	-		
020	15881-7287-0	PIPE, WATER	TUYAU D'EAU	1	-		
030	15841-9151-0	STUD	GOUJON	1	-		
040	02751-50060	NUT, FLANGE	ECROU A EMBASE	1	-		
050	15841-7296-0	BAND, PIPE	COLLIER DE TUYAU	2	-		

↔ Interchangeable; ≠ not interchangeable; ← new for old; → old for new

0504 FAN
VENTILATEUR

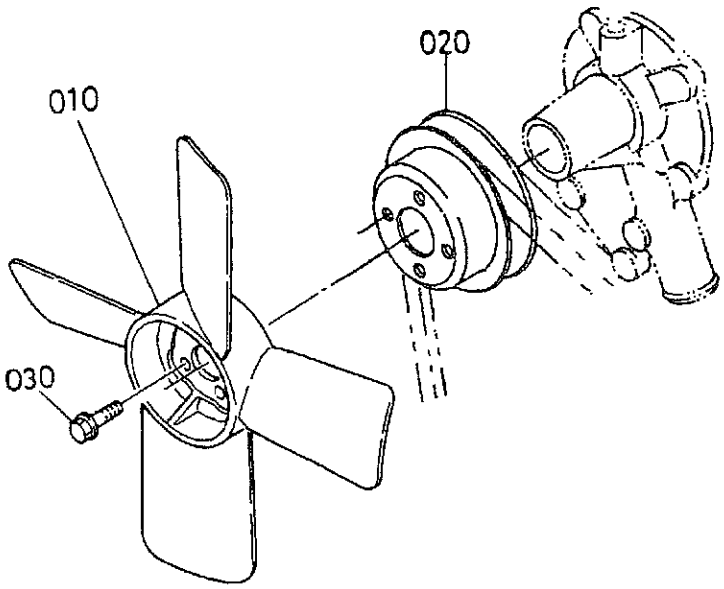

EG261-005-10

A:WG752-E2BBH

REF. No. PCS. No.	PART No. REFERENCE	PART NAME	DESIGNATION	Q'TY/S. No. Q'TE/No. S. A	B	I. C.	REMARKS REMARQUES
010	15881-7411-0	FAN	VENTILATEUR	1	-		
020	15841-7425-0	PULLEY, FAN	POULIE VENTILATEUR	1	-		
030	01754-50610	BOLT, FLANGE	VIS DE BUTEE	4	-		

↔ Interchangeable; ≠ not interchangeable; ← new for old; → old for new

0600 VALVE AND ROCKER ARM
SOUPAPES ET CULBUTEURS

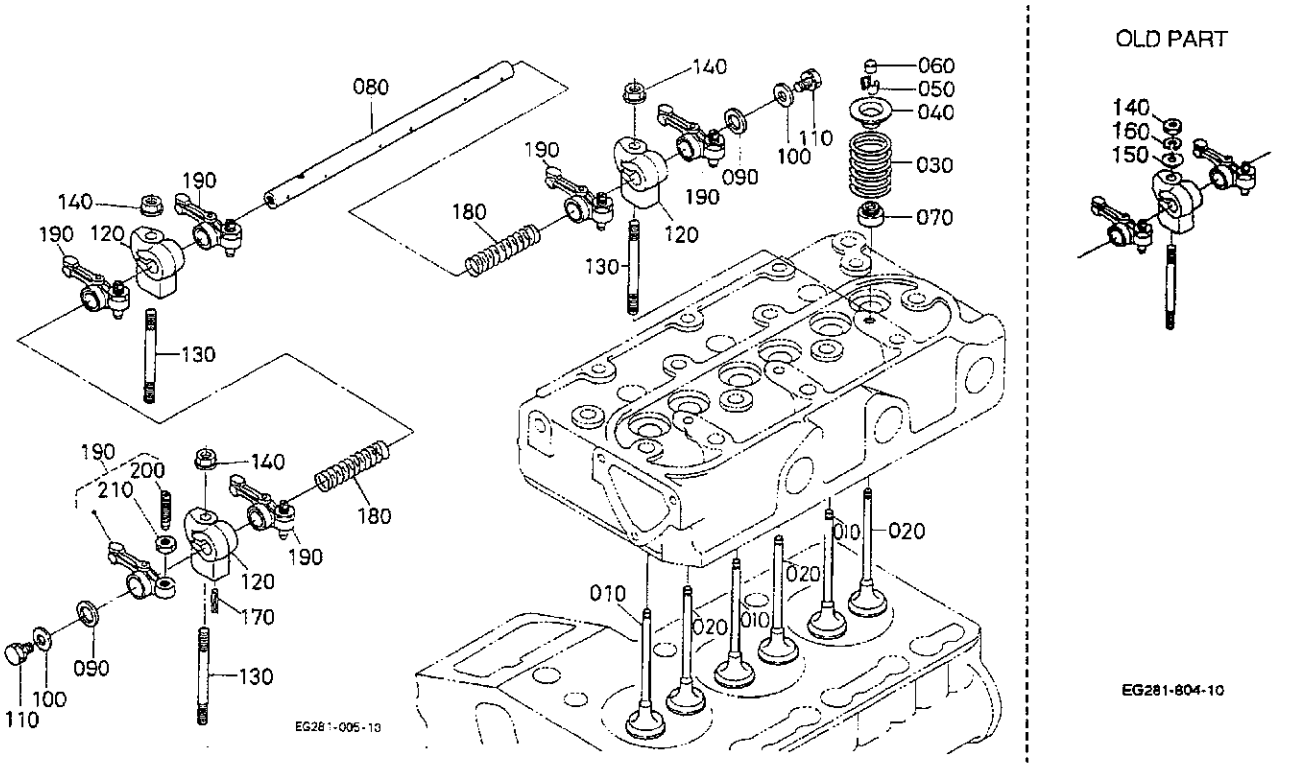

A:WG752-E2BBH

REF. No. PCS. No.	PART No. REFERENCE	PART NAME	DESIGNATION	Q'TY/S. No. Q'TE/No. S. A	B	I. C.	REMARKS REMARQUES
010	14601-1311-0	VALVE, INLET	SOUPAPE D'ADMISSION	3	-		
020	12581-1312-0	VALVE, EXHAUST	SOUPAPE D'ECHAPMENT	3	-		
030	14601-1324-0	SPRING, VALVE	RESSORT DE SOUPAPE	6	-		
040	14601-1333-0	RETAINER, SPRING	ARRETOIR DE RESSORT	6	-		
050	14601-1336-0	COLLET, VALVE SPRING	DEMI CLAVETTE	6	-		SET
060	16851-1328-0	CAP, VALVE	CHAPEAU DE SOUPAPE	6	-		
070	11420-1315-0	SEAL, VALVE STEM	JOINT DE SOUPAPE	6	-		
080	15861-1426-3	SHAFT, ROCKER ARM	ARBRE DE CULBUTEUR	1	-		
090	16871-1443-0	WASHER	RONDELLE	2	-		
100	15841-9402-2	WASHER, PLAIN	RONDELLE FREIN	2	-		
110	01023-50610	BOLT	VIS	2	-		
120	15841-1435-0	BRACKET, ROCKER ARM	SUPPORT DE CULBUTEUR	3	-		
130	14601-1441-0	STUD	GOUJON	3	-		
140	02056-50060	NUT	ECROU	3 <=2C6513	-		
140	02751-50060	NUT, FLANGE	ECROU A EMBASE	3 >=2E0001	-	≠	
150	04012-50060	WASHER, PLAIN	RONDELLE FREIN	3 <=2C6513	-		
160	04512-60060	WASHER, SPRING	RONDELLE GROWER	3 <=2C6513	-		
170	05411-00420	PIN, SPRING	GOUPILLE-RESSORT	1	-		
180	14601-1431-0	SPRING, ROCKER ARM	RESSORT DE CULBUTEUR	2	-		
190	15841-1403-0	ASSY ROCKER ARM	ENS. CULBUTEURS	6	-		
200	15841-1423-0	SCREW, ADJUSTING	VIS DE REGLAGE	6	-		
210	14601-1424-0	NUT	ECROU	6	-		

↔ Interchangeable; ≠ not interchangeable; ← new for old; → old for new

0601 INLET MANIFOLD
COLLECTEUR D'ADMISSION

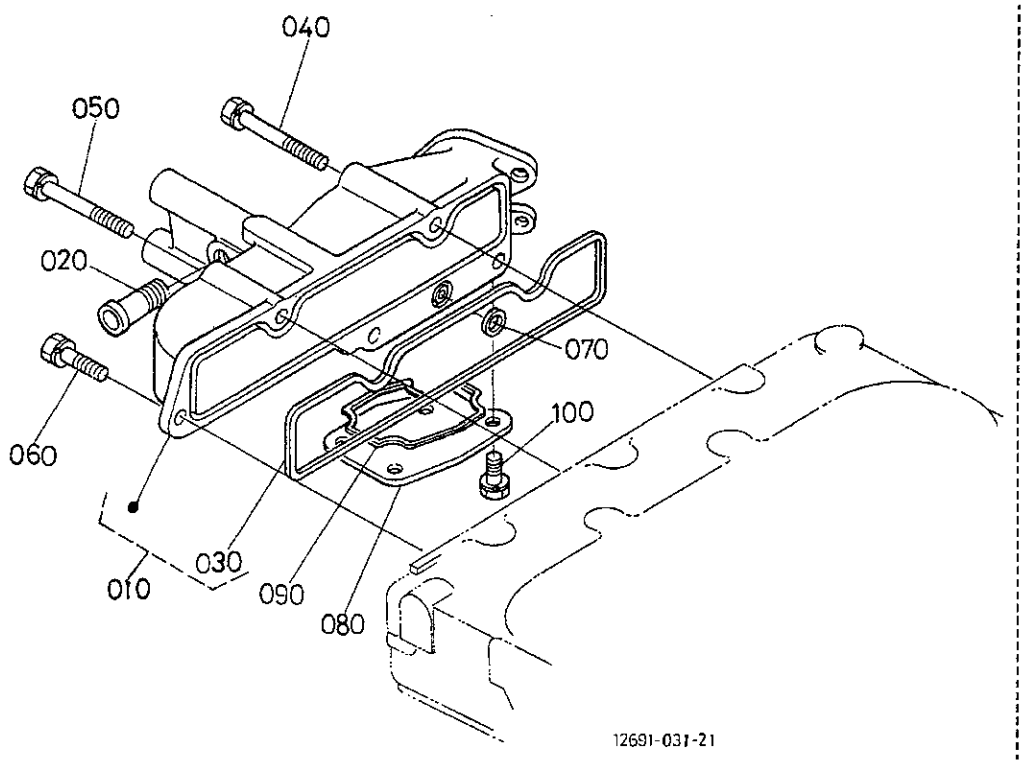

A:WG752-E2BBH

REF. No. POS. No.	PART No. REFERENCE	PART NAME	DESIGNATION	Q'TY/S. No. Q'TE/No. S. A	B	I. C.	REMARKS REMARQUES
010	12581-1171-0	ASSY MANIFOLD, INLET	ENS. COLLECTEUR D'AD.	1 <=2S7883	-		
010	EG601-1171-0	ASSY MANIFOLD, INLET	ENS. COLLECTEUR D'AD.	1 >=2U0001	-	≠	
020	15531-7334-0	PIPE, WATER RETURN	TUYAU RETOUR D'EAU	1	-		
030	12581-1182-0	GASKET, IN-MANIFOLD	JOINT DE COLL. ADM.	1 <=2S7883	-		
030	EG601-1182-0	GASKET, IN-MANIFOLD	JOINT DE COLL. ADM.	1 >=2U0001	-	≠	
040	15841-9101-0	BOLT	VIS	2	-		
050	01023-60650	BOLT	VIS	1	-		
060	01023-50625	BOLT	VIS	2	-		
070	12581-1183-0	GASKET	JOINT	1	-		
080	12581-1179-0	COVER	COUVERCLE	1	-		
090	12581-1184-0	GASKET	JOINT	1	-		
100	01023-50616	BOLT	VIS	4	-		

↔ Interchangeable; ≠ not interchangeable; ← new for old; → old for new

0602 EXHAUST MANIFOLD
COLLECTEUR D'ECHAPPEMENT

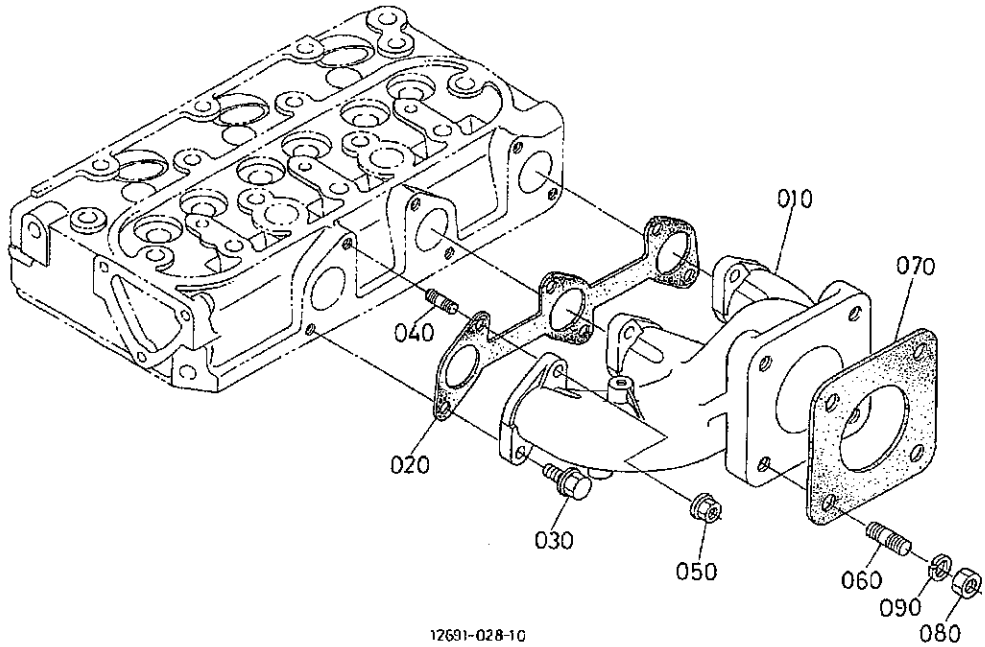

A:WG752-E2BBH

REF. No. PCS. No.	PART No. REFERENCE	PART NAME	DESIGNATION	Q'TY/S. No. Q'TE/No. S. A	B	I. C.	REMARKS REMARQUES
010	19462-1231-2	MANIFOLD, EXHAUST	COLLECTEUR D'ECHAPP.	1	-		
020	15862-1235-0	GASKET, EX-MANIFOLD	JOINT DE COLL. ECHAP.	1	-		
030	01759-50616	BOLT, UBS	VIS	3	-		
040	01513-50618	STUD	GOUJON	3	-		
050	02756-50060	NUT, UBS	ECROU	3	-		
060	01513-50822	STUD	GOUJON	4	-		
070	15263-1237-0	GASKET, MUFFLER NA	JOINT	1	-		
080	02156-50080	NUT	ECROU	4	-		
090	04512-60080	WASHER, SPRING	RONDELLE GROWER	4	-		

↔ interchangeable; ≠ not interchangeable; ← new for old; → old for new

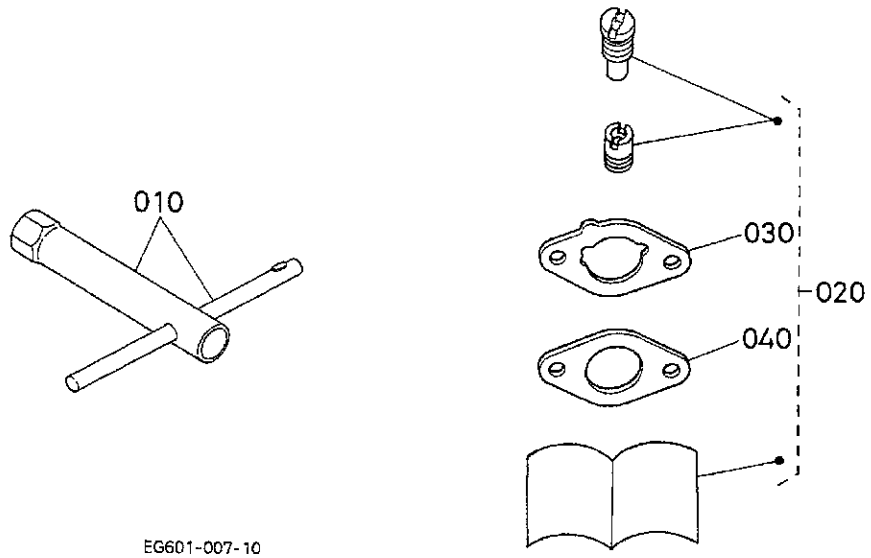

A:WG752-E2BBH

REF. No. POS. No.	PART No. REFERENCE	PART NAME	DESIGNATION	Q'TY/S. No. Q'TE/No. S. A	B	I. C.	REMARKS REMARQUES
010	12581-8620-0	WRENCH, SPARK PLUG	CLE A BOUGIES	1	-		
020	EG601-9930-0	KIT, COMPENSATION	KIT, COMPENSATION	1	-		0m AS REQUIRED
020	EG601-9931-0	KIT, COMPENSATION	KIT, COMPENSATION	1	-		1000m AS REQUIRED
020	EG601-9932-0	KIT, COMPENSATION	KIT, COMPENSATION	1	-		2000m AS REQUIRED
030	EG261-1151-0	GASKET, AIR CLEANER	JOINT D'AIR FILTRE	1	-		
040	12035-4611-0	GASKET, CARBURETOR, NA	JOINT DE CARBURATEUR	1	-		

↔ Interchangeable; ≠ not interchangeable; ← new for old; → old for new

0809 LABEL AND OPERATOR'S MANUAL
JEU D'ETIQUETTES ET INSTRUCTIONS

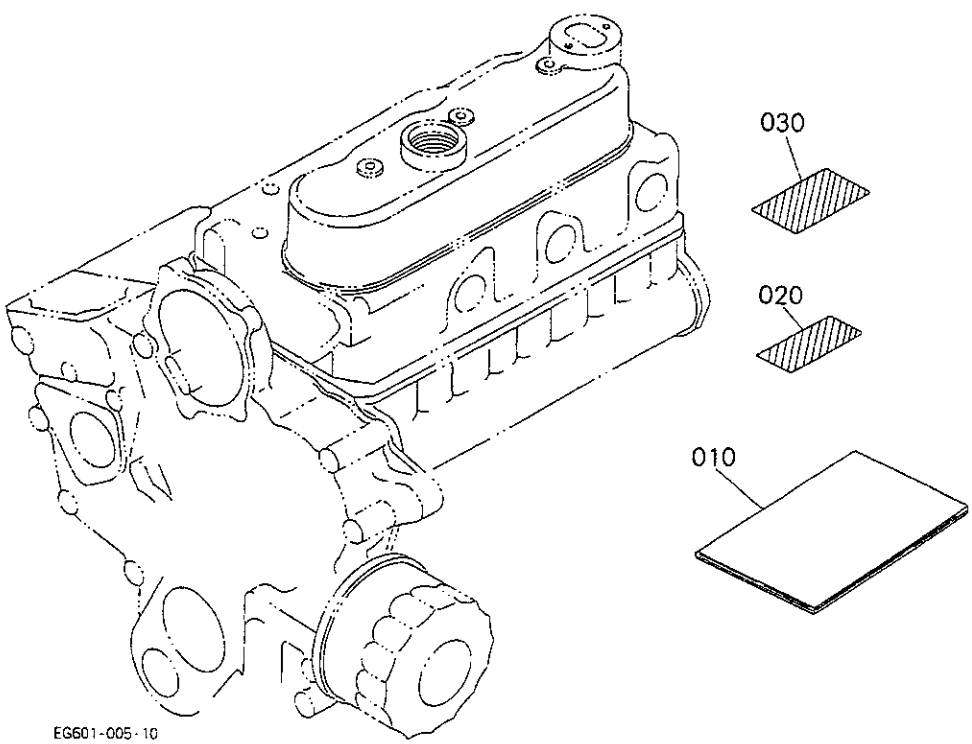

A:WG752-E2BBH

REF. No. POS. No.	PART No. REFERENCE	PART NAME	DESIGNATION	Q'TY/S. No. Q'TE/No. S. A	B	I. C.	REMARKS REMARQUES
010	EG601-8916-0	OPERATOR'S MANUAL	MANUEL DE L'UTILISA.	1 <=1Y5272	-		#
010	EG601-8916-3	OPERATOR'S MANUAL	MANUEL DE L'UTILISA.	1 >=2A0001	-	≠	#
010	EG601-8916-4	OPERATOR'S MANUAL	MANUEL DE L'UTILISA.	1 >=4E0001	-	←	#
020	12599-8822-2	LABEL, CAUTION	ETIQUETTE	1	-		
030	19426-8788-0	LABEL, INSTRUCTION	ETIQUETTE	1	-		

↔ Interchangeable; ≠ not interchangeable; ← new for old; → old for new

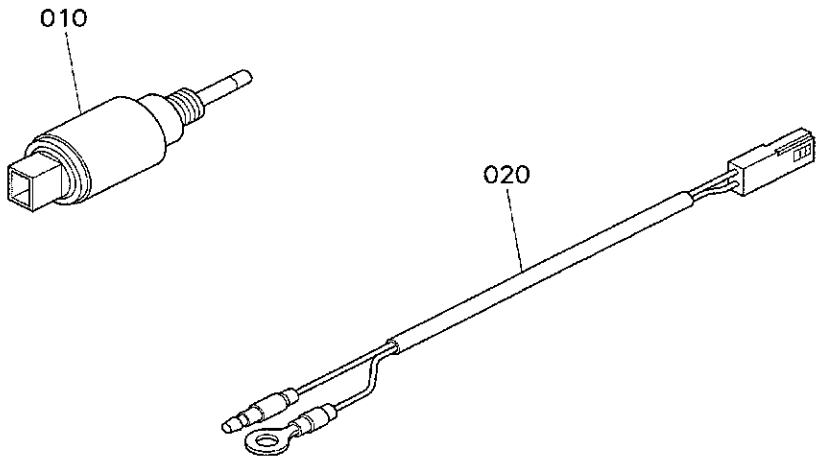

EG602-022-10

A:WG752-E2BBH

REF. No. PCS No	PART No. REFERENCE	PART NAME	DESIGNATION	Q'TY/S. No. Q'TE/No. S. A	B	I. C.	REMARKS REMARQUES
010	EG551-4472-0	ASSY SOLENOID	ENS. SOLENOID	1	-		
020	EG551-4492-0	ASSY TERMINAL CA-104	ENS. DEBORNE, CA-104	1	-		

↔ Interchangeable; ≠ not interchangeable; ← new for old; → old for new

NUMERICAL INDEX
INDEX NUMERIQUE

PART No. REFERENCE	PAGE PAGE	REF. No. POS. No.
E9151-3314-0	5	130
EG261-0542-0	5	040
EG261-0551-2	5	110
EG261-1151-0	17	080
	35	030
EG261-1160-3	17	070
EG261-1450-0	5	010
EG261-7337-2	17	075
EG261-9149-0	17	040
EG266-5640-0	19	010
EG281-5166-0	14	020
EG281-5634-0	15	110
EG283-0446-0	9	050
EG283-5581-0	15	030
EG283-5582-0	15	040
EG283-6772-0	20	020
EG283-6865-0	21	060
EG283-6880-0	20	080
	21	010
EG283-6883-0	20	140
EG294-5611-0	15	150
EG551-4472-0	37	010
EG551-4492-0	37	020
EG601-0304-0	3	030
EG601-1171-0	33	010
EG601-1182-0	33	030
EG601-2111-0	11	010
EG601-2191-0	11	010
EG601-4401-0	17	010
EG601-6752-0	20	040
EG601-6752-2	20	040
EG601-6753-0	20	050
EG601-6753-2	20	050
EG601-6754-0	20	060
EG601-6754-2	20	060
EG601-7303-0	29	010
EG601-7334-0	29	060
EG601-7337-0	28	080
EG601-8916-0	36	010
EG601-8916-3	36	010
EG601-9930-0	35	020
EG601-9931-0	35	020
EG601-9932-0	35	020
RP201-5371-0	23	120
01023-50610	13	070
	32	110
01023-50612	2	020
	10	080
	14	180
01023-50614	10	140
01023-50614	14	050
	19	150
01023-50616	17	110
	23	090
	28	040
	33	100
01023-50618	4	090
	15	090
01023-50620	9	070
01023-50622	9	080
01023-50622	28	130
	29	080
01023-50625	33	060
01023-50635	5	060
	18	070
01023-50638	29	090
01023-50675	4	130
01023-60650	4	100
	28	050
	33	050
01023-60670	4	120
01053-50612	14	030
	15	130
01053-50622	15	120
01123-50830	23	030
01123-60814	2	070
01123-60816	3	020
	13	050
	22	020
01153-50828	25	020
01153-50855	23	040
01513-50618	34	040
01513-50822	34	060
01518-50820	19	120
01754-50610	31	030
01759-50616	34	030
02014-50060	19	060
02056-50060	32	140
02156-50080	15	160
	17	050
02156-50080	19	130
	23	060
	25	030
	25	050
	34	080
02751-50060	30	040
	32	140
02756-50060	34	050
02783-50100	8	060
03034-50510	20	160
04012-50060	32	150
04013-60080	15	170
	22	030
	23	050
04015-60080	19	110
	23	080
04512-60050	18	040
04512-60060	32	160
04512-60080	15	180
	17	060
04512-60080	19	140
	23	070
	25	040
	25	060
	34	090
04814-00160	2	060
04814-06130	4	140
04814-16220	12	200
04814-50300	5	140
05012-00814	1	090
05411-00420	32	170
05712-00408	8	050
05712-00515	11	120
	14	100
05712-00518	10	060
07715-00801	14	130
07715-03207	11	100
07715-03211	4	070
07715-03217	14	150
08103-06203	14	160
08153-06203	14	080
11420-1315-0	32	070
12035-4611-0	17	030
	35	040
12182-9331-0	19	050
12182-9341-0	19	070
12581-1171-0	33	010
12581-1179-0	33	080
12581-1182-0	33	030
12581-1183-0	33	070
12581-1184-0	33	090
12581-1312-0	32	020
12581-2131-0	11	030
12581-4301-2	16	010
12581-5165-0	14	010
12581-5583-0	15	050
12581-5585-0	15	060
12581-5587-0	15	020
12581-5604-0	18	020
12581-5605-0	18	010
12581-5610-0	15	010
12581-5615-0	18	060
12581-5631-0	15	070
12581-5633-0	15	100
12581-5635-0	15	190
12581-5639-0	15	200
12581-5701-0	19	040
12581-5704-0	19	090
12581-5724-0	19	100
12581-6850-0	21	020
12581-6851-0	21	040
12581-6860-0	21	030
12581-6863-0	21	050
12581-6867-0	21	070
12581-6882-0	20	130
12581-6885-0	13	060
12581-6890-0	22	010
12581-6892-0	22	040
12581-8620-0	35	010
12584-1603-0	14	060
12584-1618-0	14	070
12596-4615-0	17	020
12599-4681-0	19	160
12599-6442-0	23	020
12599-6771-0	20	010
12599-8822-2	36	020
12691-0101-3	1	010
12691-0331-0	3	110
12691-0402-0	4	010
12691-0462-0	13	040
12691-2105-3	11	020
12691-2109-3	11	020
12691-5643-0	19	030
12691-6751-0	20	030
12691-6884-0	20	150
12691-7335-0	28	070
13641-5686-0	19	080
14601-0345-0	3	100
14601-1311-0	32	010
14601-1324-0	32	030
14601-1333-0	32	040
14601-1336-0	32	050
14601-1424-0	32	210
14601-1431-0	32	180
14601-1441-0	32	130
14601-2133-0	11	040
15221-0175-0	3	010
15221-3365-0	1	100
15221-3375-0	2	030
15231-3396-0	1	110
15241-3229-0	4	030
15261-0337-0	3	050
15261-2353-0	11	160
15261-2354-0	11	170
15261-2395-0	11	160
15261-2396-0	11	160
15261-2397-0	11	170
15261-2398-0	12	170
15261-5547-0	14	140
15261-6641-0	18	030
15261-9203-0	24	160
15261-9301-0	24	090
15261-9402-0	24	180
15261-9407-0	24	170
15261-9601-0	1	050
	3	060
15261-9616-0	1	080
15263-1237-0	34	070
15272-6759-0	20	070
15321-9626-0	3	040
15381-6404-0	24	040
15381-6407-0	24	110
15381-6412-0	24	020
15381-6415-0	24	150
15381-6419-0	24	140
15381-6429-0	24	100
15381-6436-0	24	080
15381-7414-0	24	070
15451-9627-0	1	040
15481-7305-0	29	040
15521-9361-0	10	040
15521-9602-0	1	060
15521-9603-0	1	070
15531-6401-6	23	010
	24	010
15531-6411-0	24	030
15531-7301-0	28	100
15531-7334-0	33	020
15531-7418-0	24	060
	24	120

NUMERICAL INDEX
INDEX NUMERIQUE

PART No. REFERENCE	PAGE PAGE	REF. No. POS. No.
15531-9301-0	24	130
15601-9665-0	5	100
	14	040
	15	140
15694-2348-0	11	150
15694-2393-0	11	150
15694-2394-0	11	150
15841-0409-0	9	010
15841-0454-0	9	020
	9	100
15841-0454-0	9	120
15841-0456-2	9	130
15841-0481-0	9	040
15841-0482-2	9	060
15841-0567-0	5	070
15841-1354-0	3	070
15841-1356-0	3	080
15841-1403-0	32	190
15841-1423-0	32	200
15841-1435-0	32	120
15841-1462-0	5	090
15841-1627-0	10	070
15841-1632-0	14	170
15841-1651-0	10	050
15841-2198-0	11	060
15841-2325-0	12	180
15841-2411-0	11	110
15841-3566-0	8	040
15841-3693-0	4	060
15841-3901-0	27	010
15841-5115-0	14	090
15841-5545-0	14	110
15841-5569-0	14	120
15841-5623-0	18	050
15841-5721-2	15	080
15841-7286-0	30	010
15841-7292-2	28	030
15841-7292-3	28	030
15841-7296-0	30	050
15841-7302-0	1	130
15841-7326-0	28	110
15841-7425-0	31	020
15841-9101-0	4	110
	33	040
15841-9105-0	8	030
15841-9151-0	30	030
15841-9401-0	4	040
15841-9402-2	32	100
15841-9602-0	3	090
15852-0436-0	9	030
15852-2516-0	13	030
15852-3314-0	5	130
15852-5285-0	17	090
15852-6301-0	25	010
	26	010
15852-6302-0	26	030
15852-6303-0	26	040
15852-6304-0	26	070
15852-6305-0	26	020
15852-6307-0	26	090
15852-6308-0	26	110
15852-6320-0	26	160
15852-6324-0	26	050
15852-6325-0	26	170
15852-6332-0	26	080
15852-6336-0	26	120
15852-6337-0	26	150
15852-6338-0	26	130
15852-6339-0	26	140
15852-6341-0	26	100
15852-7352-0	29	020
15852-7355-0	29	030
15852-9331-0	26	180
15853-3243-0	6	010
15861-1426-3	32	080
15861-1601-0	10	030
15861-2201-0	11	050
15861-2231-0	11	080
15861-2297-0	11	080
15861-2298-0	11	080
15861-2347-0	11	130
15861-2348-0	11	140
15861-2386-0	11	140
15861-2387-0	11	140
15861-2391-0	11	130
15861-2392-0	11	130
15862-0150-0	2	010
15862-0413-2	4	080
15862-1235-0	34	020
15875-2401-3	10	090
15875-2425-0	10	130
15875-2428-2	10	100
15875-2432-0	10	120
15875-2437-0	10	110
15877-0414-0	4	150
15881-2331-0	12	190
15881-7287-0	30	020
15881-7343-2	29	070
15881-7411-0	31	010
15881-9103-0	12	210
15881-9701-0	23	110
16241-7336-0	5	120
	28	090
16241-7337-0	28	020
16264-5214-0	17	100
16851-0404-0	9	090
16851-1328-0	32	060
16851-1511-0	10	020
16851-1555-0	10	010
16851-2214-0	11	070
16851-3211-0	2	050
16851-3501-0	8	010
16851-3501-2	8	010
16851-3515-2	8	020
16851-3641-0	7	010
16851-3695-0	4	050
16851-6382-2	13	020
16851-7327-0	28	120
16851-9601-0	4	020
16851-9626-0	1	020
16851-9627-0	1	030
16861-0405-0	9	110
16861-1452-2	5	020
16861-2301-0	11	090
16861-2501-4	13	010
16861-7428-0	23	100
16871-1443-0	32	090
16873-7270-4	28	010
17331-5919-0	1	120
17472-1449-0	5	080
17524-0513-0	5	050
19237-6588-0	23	140
19237-6591-0	23	150
19298-9602-0	28	060
19426-8788-0	36	030
19428-6583-0	23	130
19462-1231-2	34	010
19837-6315-0	26	060
19883-7351-0	29	050
68271-6591-0	23	160
68271-6592-0	23	170
6C040-8286-0	24	050
6C090-5896-0	2	040