MODEL 2023/2017

TOMCAT

Operator and Parts Manual

VERSION 1.0

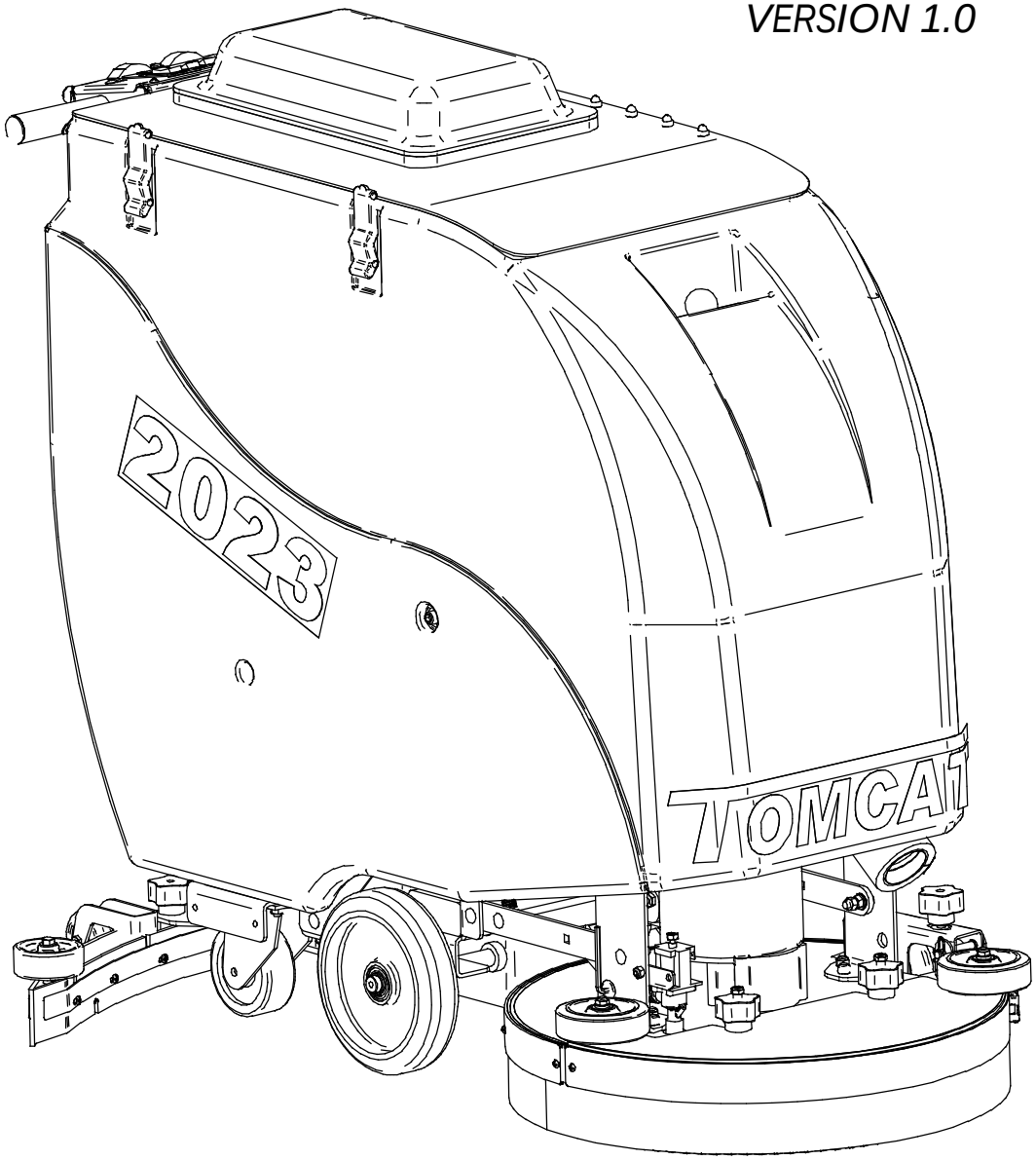

Mid-Central Corporation
P.O. Box 241
Racine, Wisconsin 53401

Phone: 1-800-450-9824
Fax: 1-866-632-6961

www.tomcatequip.com

HOW TO USE THIS MANUAL

This manual contains the following sections:

- *HOW TO USE THIS MANUAL*
- *SAFETY*
- *OPERATIONS*
- *MAINTENANCE*
- *PARTS LIST*

The *HOW TO USE THIS MANUAL* section will tell you how to find important information for ordering the correct replacement parts.

Parts may be ordered from authorized dealers. When placing an order for parts, the machine model and serial number are important.

Refer to *MACHINE INFORMATION* on page one of this manual, which is filled out during the installation of your machine.

The serial number of your machine is located on the lower half of the control panel of the machine. (See Picture Below)

The *SAFETY* section contains important information regarding hazard or unsafe practices of the machine.

Levels of hazards are identified that could result in product or personal injury, or severe injury resulting in death.

The *OPERATIONS* section is to familiarize the operator with the operation and function of the machine.

The *MAINTENANCE* section contains preventative maintenance to keep the machine and its components in good working condition. They are listed in this general order:

- Batteries
- Scrub Brushes
- Adjusting Squeegee
- Service Schedule
- Machine Trouble shooting

The *PARTS LIST* section contains assembled parts illustrations and corresponding parts list. The parts lists include a number of columns of information:

- ITEM - column refers to the reference number on the parts illustration.
- PART NO. - column lists the part number for the part.
- QTY - column lists the quantity of the part used in that area of the machine.
- DESCRIPTION - column is a brief description of the part.
- COMMENTS - column for information not noted by the other columns.

NOTE: If a service or option kit is installed on your machine, be sure to keep the *KIT INSTRUCTIONS* which came with the kit. It contains replacement part numbers needed for ordering future parts.

TABLE OF CONTENTS

MACHINE INFORMATION FORM	PAGE 1
WARRANTY REGISTRATION FORM	PAGE 2
MACHINE SPECIFICATIONS	PAGE 3
COMMON WEAR PARTS	PAGE 4
SAFETY MESSAGES	PAGE 5
!!SAFETY PRECAUTIONS!!	PAGE 6
MACHINE CONTROLS AND FEATURES	PAGE 7-8
MACHINE SETUP	PAGE 9
ADJUSTING & REMOVING SQUEEGEE	PAGE 10
INSTALLING PAD DRIVER OR BRUSH	PAGE 11
OPERATION	PAGE 12-13
ADJ. SOLUTION FLOW & SHROUD CURTAIN	PAGE 14
ADJ. PAD ASSIST DRIVE, DRAIN & CLEAN TANKS	PAGE 14-15
TIP TANK, RAISE & LOWER SQUEEGEE	PAGE 16
ADJ. DECK HEIGHT, VAC MOTOR & SOLUTION FILTER	PAGE 17
CHARGING BATTERIES	PAGE 18
MAINTENANCE & STORING MACHINE	PAGE 19
PREVENTATIVE MAINTENANCE RECORDS	PAGE 20-21
TROUBLESHOOTING	PAGE 22
MACHINE PARTS	PAGE 23-68

PARTS BREAKDOWN ILLUSTRATION

ACTUATOR LIFT ASSEMBLY	PAGE 23-24
SQUEEGEE TRAIL ARM ASSEMBLY	PAGE 25-26
AXLE SUPPORT ASSEMBLY	PAGE 27-28
SQUEEGEE SUSPENSION ASSEMBLY	PAGE 29-30
MODEL 2023 FRAME ASSEMBLY FRONT	PAGE 31-32
MODEL 2023 FRAME ASSEMBLY MIDDLE	PAGE 33-34
MODEL 2023 FRAME ASSEMBLY REAR	PAGE 35-36
SCRUB DECK WHEEL ASSEMBLY	PAGE 37-38
20" DISK DECK ASSEMBLY	PAGE 39-40
20" SHROUD ASSEMBLY	PAGE 41-42
23" DISK DECK ASSEMBLY	PAGE 43-44
23" SHROUD ASSEMBLY	PAGE 45-46
DISK DECK BRUSH ASSEMBLY	PAGE 47-48
VACUUM MOTOR ASSEMBLY	PAGE 49-50
MODEL 2023 TANK INSIDE ASSEMBLY	PAGE 51-52
MODEL 2023 TANK OUTSIDE ASSEMBLY	PAGE 53-54
TANK LID ASSEMBLY	PAGE 55-56
CONTROL PANEL	PAGE 57-58
HANDLE BAR ASSEMBLY	PAGE 59-60
32 INCH SQUEEGEE ASSEMBLY	PAGE 61-62
FRAME, SUSPENSION, SQUEEGEE ASSEMBLY	PAGE 63-64
FRAME, SCRUB DECK ASSEMBLY	PAGE 65-66
FRAME, BATTERY, TANK TANK LID, CONTROL-PANEL, HANDLE BAR ASS'Y	PAGE 67-68

MACHINE INFORMATION

PLEASE FILL THIS AREA OUT AT THE TIME OF INSTALLATION FOR FUTURE REFERENCE.

MODEL NUMBER_____

SERIAL NUMBER:_____

INSTALLATION DATE:_____

INSTALLING DEALER:_____

DEALER CONTACT: _____

ADDRESS:_____

CITY, STATE, ZIP: _____

PHONE NUMBER:_____

THIS OPERATOR AND PARTS MANUAL SHOULD BE CONSIDERED A PERMANENT PART OF THE UNIT AND SHOULD REMAIN WITH THE UNIT AT ALL TIMES. THIS OPERATOR AND PARTS MANUAL COVERS ALL THE TOMCAT 2017 SERIES & 2023 SERIES SCRUBBERS. YOU MAY FIND DESCRIPTIONS AND FEATURES THAT ARE NOT ON YOUR PARTICULAR MODEL. THE INFORMATION AND SPECIFICATIONS INCLUDED IN THIS PUBLICATION WERE IN EFFECT AT THE TIME OF PRINTING. MID-CENTRAL CORP. RESERVES THE RIGHT TO MAKE CHANGES WITHOUT NOTICE OR INCURRING ANY OBLIGATION.

TO REGISTER FOR WARRANTY, FAX YOUR WARRANTY REGISTRATION FORM TODAY!
FAX # (886)-632-6961

MID-CENTRAL CORPORATION
P.O. BOX 241
RACINE, WI 53401
PHONE: 800-450-9824
FAX 866-632-6961
WWW.TOMCATEQUIP.COM

WARRANTY REGISTRATION FORM

****COMPLETE FORM IMMEDEATLEY AND FAX BACK TO (886)-632-6961****

DEALER:_____ SERIAL NUMBER:_____

LOCATION (CITY, STATE):_____ INSTALL DATE:_____

CUSTOMER:_____ HOUR METER:_____

CONTACT:_____ INSTALLED BY:_____

ADDRESS:_____

CITY:_____STATE_____ZIP_____

PHONE:_____ FAX:_____

MODEL NUMBER:_____

OPTIONS: 1._____ 4._____

2._____ 5._____

3._____ 6._____

PADS:_____

BRUSHES:_____

SQUEEGEE SIZE:_____

BUYER'S REPRESENTAVE HAS:

1. RECEIVED INSTRUCTION IN PROPER OPERATION OF THIS MACHINE.
2. RECEIVED OPERATOR'S MANUAL FOR THIS MACHINE.
3. BEEN MADE AWARE THAT ANY OPERATOR SHOULD READ THE MANUAL BEFORE OPERATING THIS MACHINE.

DEALER REP. PRINT:_____ SIGN:_____

CUSTOMER PRINT:_____ SIGN:_____

MACHINE SPECIFICATIONS

	2017	2023
BODY CONSTRUCTION/DIMENSIONS		
Tank Material:	Poly (3/8" thick)	Poly (3/8" thick)
Chassis Construction:	3/16" Steel	3/16" Steel
Front Wheels:	(2) 10" x 2"	(2) 10" x 2"
Rear Casters:	(2) 4" x 2"	(2) 4" x 2"
Size (L x W x H):	42" x 18" x 40"	48" x 18" x 40"
Squeegee Size:	26"	32"
Weight (w/batteries)	334 lbs	406 lbs
BRUSH/PAD SYSTEM		
Brush/Pad Diameter:	*2017-17:* (1) 17" *2017-20:* (1) 20"	*2023-20*: (1) 20 *2023-23*: (1) 23
Standard Brush Motor (Power / Speed):	(1) 0.75 hp / 200 rpm	(1) 0.75 hp / 200 rpm
Brush Down Pressure:	0 – 125 pounds	0 - 125 pounds
BATTERY SYSTEM:		
System Voltage	24 volts	24 volts
Standard Battery Rating:	105 AH	140 AH
Optional Battery Rating:	140 AH	210 AH
Battery Run Time:	Up to 3 hours	Up to 4 hours.
Charger (110-v / 60 Hz, auto):	24-v / 15 amp	24-v / 18 amp
SOLUTION SYSTEM:		
Solution Tank Cap.:	17 gallons	18 gallons
Solution Flow Rate:	0 – 1.5 gpm	0-1.5 gpm
Solution Filter:	Stainless / Inline	Stainless / Inline
RECOVERY SYSTEM:		
Recovery Tank Cap.:	17 gallons	18 gallons
Vac. Power (standard)	0.75 hp	0.75 hp
Drain Hose:	2.0" diameter	2.0" Diameter
Vacuum Specs(water-lift / airflow):	68" / 70 cfm	68" / 70 cfm
Demisting Chamber:	3 gallons	3 gallons
Drain Saver:	60 cubic inches	60 cubic inches
PRODUCTIVITY:		
Cleaning Width:	*2017-17:* (1) 17" *2017-20:* (1) 20"	*2023-20*: 20" *2023-23*: 23"
Cleaning Rate/Hour:	Up to	Up to 20,543 sq.ft/hr
SOUND LEVEL	70 dBA @ Operator's Pos.	72 dBA @ Operator's Position

AUTHORIZED DISTRIBUTOR

MID-CENTRAL CORPORATION
P.O. Box 241
Racine, WI 53401
Phone: (800) 450-9824
Fax: (866) 632-6961
www.tomcatequip.com
Copyright Mid-Central Corporation 2005. All rights reserved.
Since our policy is one of constant improvement, all specifications are subject to change without notice.

COMMON WEAR PARTS

ITEM	MODEL 2017-17	MODEL 2017-20	MODEL 2023-20	MODEL 2023-23
BRUSH TYPE	*DISK*	*DISK*	*DISK*	*DISK*
BRUSHES				
SUPER-GRIT	17-421SS	20-421SS	20-421SS	23-421SS
TOUGH-GRIT	17-421S	20-421S	20-421S	23-421S
MIDI-GRIT	17-421C	20-421C	20-421C	23-421C
LIGHT-GRIT	17-421PS	20-421PS	20-421PS	23-421PS
POLY (.028)	17-421P	20-421P	20-421P	23-421P
NYLON (.016)	17-421N	20-421N	20-421N	23-421N
TAMPICO	17-421T	20-421T	20-421T	23-421T
PAD DRIVER	17-421D	20-421D	20-421D	23-421D

EXTRA PAD DRIVER RETAINING CLIP: 40-433
BRUSH REPAIR KIT: 40-423 REPLACEMENT LOCATING CLIP FOR ALL DISK BRUSHES

PADS				
SUPER BLACK	17-422BB	20-422BB	20-422BB	23-422BB
BLACK	17-422B	20-422B	20-422B	23-422B
BROWN	17-422BR	20-422BR	20-422BR	23-422BR
GREEN	17-422G	20-422G	20-422G	23-422G
BLUE	17-422BL	20-422BL	20-422BL	23-422BL
RED	17-422R	20-422R	20-422R	23-422R
WHITE	17-422W	20-422W	20-422W	23-422W

SQUEEGEE KITS	SIZE	GUM RUBBER	LINATEX
	26"	190-770G	190-770L
	32"	22-770G	22-770L
	35"	25-770G	25-770L

KIT INCLUDES: (1) REAR BLADE, (1) FRONT BLADE, AND (2) BACKUP WHEELS WITH HARDWARE

NOTE: IT IS STAMPED INTO THE TOP OF THE PLATED STEEL SQUEEGEE BLANK, ON 32", 35", AND 38" SQUEEGEES.

MODELS 2017-17:
HAVE A 26" SQUEEGEE UNLESS OTHER SIZE IS SPECIALLY ORDERED AT TIME OF PURCHASE

MODELS 2017-20 & 2023-20:
HAVE A 32" SQUEEGEE UNLESS OTHER SIZE IS SPECIALLY ORDERED AT TIME OF PURCHASE

MODELS 2023-23:
HAVE A 35" SQUEEGEE UNLESS OTHER SIZE IS SPECIALLY ORDERED AT TIME OF PURCHASE

NOTE: THE 26" SQUEEGEE IS DESIGNED FOR NARROW ISLES AND MAY NOT HAVE THE SAME WATER CONTROL AROUND TIGHT TURNS AS THE LARGER SQUEEGEES.

SAFETY MESSAGES

YOUR SAFETY, AND THE SAFETY OF OTHERS, IS VERY IMPORTANT, AND OPERATING THIS UNIT SAFELY IS AN IMPORTANT RESPONSIBILITY.

TO HELP YOU MAKE INFORMED DECISIONS ABOUT SAFETY, WE HAVE PROVIDED OPERATING PROCEDURES AND OTHER SAFETY INFORMATION IN THE MANUAL. THIS INFORMATION INFORMS YOU OF POTENTIAL HAZARDS THAT COULD HURT YOU OR OTHERS.

IT IS NOT PRACTICAL OR POSSIBLE TO WARN YOU OF ALL THE HAZARDS ASSOCIATED WITH OPERATING THIS UNIT. YOU MUST USE YOUR OWN GOOD JUDGEMENT.

THIS IS INTENDED FOR COMMERCIAL USE. IT IS DESIGNED TO BE USED ON HARD FLOORS IN AN INDOOR ENVIRONMENT, WITH THE RECOMMENDED PADS OR BRUSHES.

1. DO NOT OPERATE UNIT:

UNLESS TRAINED AND AUTHORIZED.
UNLESS OPERATOR MANUAL IS READ AND UNDERSTOOD.
IF UNIT IS NOT IN PROPER OPERATING CONDITION.

2. WHEN OPERATING UNIT:

REMOVE LOOSE OBJECTS FROM THE FLOOR THAT MAY BE PROJECTED FROM THE REVOLVING BRUSHES.
KEEP HANDS AND FEET AWAY FROM REVOLVING BRUSHES.
DO NOT OPERATE MACHINE WHERE FLAMMABLE LIQUIDS ARE PRESENT.
USE EXTREME CAUTION WHEN MANUEVERING.

3. BEFORE LEAVING:

MAKE SURE MACHINE IS TURNED OFF.
STOP ON LEVEL SURFACES.
DISCONNECT BATTERIES.

4. BEFORE SERVICING:

STOP ON LEVEL SURFACE, AND SECURE MACHINE.
DISCONNECT BATTERIES.

!! SAFETY PRECAUTIONS!!

WARNING: HAZARDOUS VOLTAGE. SHOCK, BURNS OR ELECTROCUTION CAN RESULT. ALWAYS DISCONNECT THE BATTERIES BEFORE SERVICING MACHINE.

WARNING: BATTERIES EMIT HYDROGEN GASES, EXPLOSION OR FIRE CAN RESULT. KEEP SPARKS AND OPEN FLAMES AWAY.

WARNING: CHARGE UNIT IN A WELL VENTILATED AREA, AND KEEP BATTERY COMPARTMENT OPEN WHEN CHARGING. EXPLOSION OR FIRE COULD RESULT.

WARNING: BATTERY ACID CAN CAUSE BURNS. WEAR PROTECTIVE EYE WEAR AND GLOVES WHEN SERVICING BATTERIES.

WARNING: DO NOT STORE OUTDOORS OR PRESSURE WASH. PREVENT FROM GETTING ELECTRONIC COMPONENTS WET.

WARNING: THE USE OF PARTS AND SOLUTIONS OTHER THAN RECOMMENDED BY THE MANUFACTURER MAY CAUSE DAMAGE OR ENDANGER PEOPLE.

WARNING: DRESS SAFELY. DO NOT WEAR RINGS OR METAL WRIST WATCHES WHILE WORKING ON THIS MACHINE. THEY CAN CAUSE AN ELECTRICAL SHORT, WHICH, CAN CAUSE SERIOUS BURNS. DO NOT WORK ON THIS MACHINE WHILE WEARING A TIE, SCARF OR OTHER LOOSE, DANGLING NECKWARE OR CLOTHING. THESE LOOSE ITEMS CAN TANGLE IN THE ROTATING PARTS AND CAUSE SERIOUS INJURY OR EVEN DEATH.

WARNING: DO NOT USE THE MACHINE AS A STEP LADDER OR CHAIR.

WARNING: ONLY OPERATE THIS MACHINE FROM THE OPERATORS POSITION. IT WAS NOT DESIGNED TO CARRY PASSENGERS.

WARNING: DO NOT OPERATE THIS MACHINE ON RAMPS OR UNEVEN SURFACES. WHEN CLIMBING A RAMP, ALWAYS DRIVE THE MACHINE IN FORWARD STRAIGHT UP OR DOWN THE RAMP. NEVER DRIVE ACROSS THE INCLINE. DO NOT BACK DOWN OR TURN ON RAMPS!

WARNING: ALWAYS USE THE CHARGER PROVIDED BY THE MAUFACURER TO CHARGE THE MACHINE. IT IS AN AUTOMATIC CHARGER, SPECIFICALLY DESIGNED TO CHARGE AT THE APPROPRIATE RATE. IF YOU MUST USE A DIFFERENT CHARGER, DISCONNECT THE BATTERIES BEFORE CHARGING. THIS WILL PREVENT DAMAGE TO THE ELECTRONIC SPEED CONTROLLER.

WARNING: UNDERSTAND THE DYNAMIC BRAKING SYSTEM BEFORE YOU OPERATE THE MACHINE ON RAMPS. MACHINE DOES NOT COAST.

WARNING: DO NOT PARK THE MACHINE ON RAMPS OR SLOPES.

WARNING: DO NOT OPERATE THE MACHINE IF ANY PARTS HAVE BEEN REMOVED OR DAMAGED.

WARNING: DO NOT REMOVE, PAINT OVER, OR DESTROY WARNING DECALS. IF WARNING DECALS BECOME DAMAGED, THEY MUST BE REPLACED.

WARNING: DO NOT OPERATE MACHINE IN UNSAFE CONDITION. IF THE MACHINE IS IN NEED OF REPAIR OR IS IN ANY WAY UNSAFE TO OPERATE, THE MATTER SHOULD BE REPORTED IMMEDIATELY TO THE SHIFT SUPERVISOR. DO NOT OPERATE THE MACHINE UNTIL IT IS RETURNED TO PROPER OPERATING CONDITION.

WARNING: THIS MACHINE MUST ONLY BE OPERATED BY TRAINED OPERATOR. AS PART OF HIS OR HER TRAINING, THEY MUST READ THIS MANUAL THOROUGHLY. IF EXTRA COPIES ARE NEEDED, CONTACT YOUR LOCAL DEALER.

WARNING: ALWAYS TURN OFF THE MACHINE, BEFORE LEAVING IT UNATTENDED.

WARNING: DO NOT OPERATE OVER ELECTRICAL FLOOR OUTLETS. MAY RESULTS IN SERIOUS INJURY.

MACHINE CONTROLS AND FEATURES

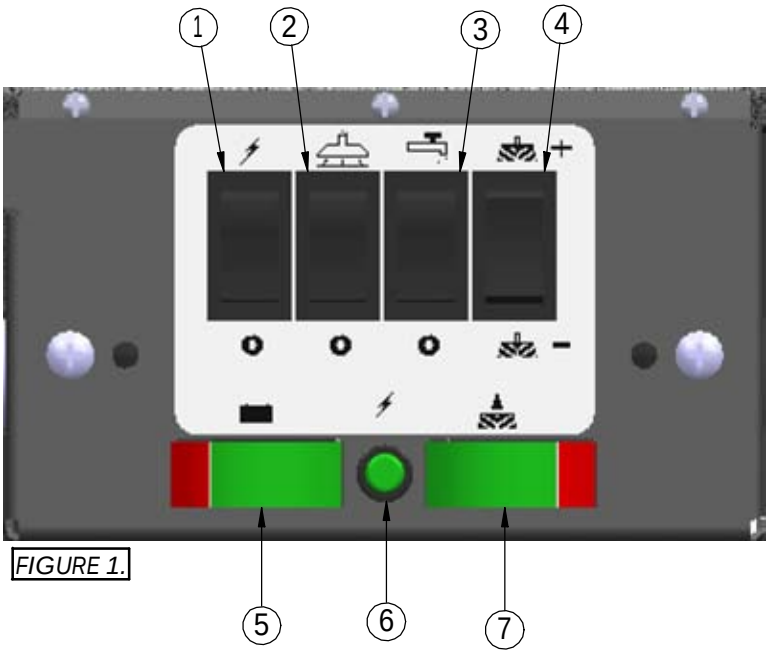

FIGURE 1.

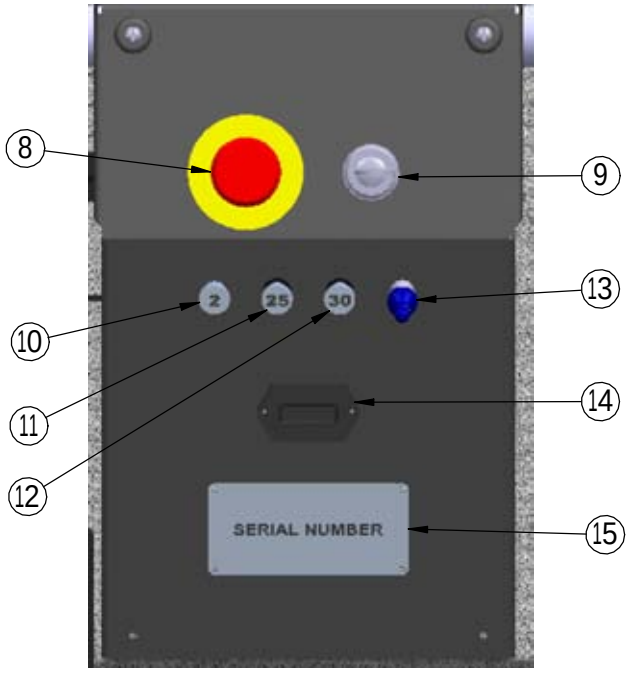

FIGURE 2.

FIGURE 3.

FIGURE 4.

CONTROLS AND FUNCTIONS

SEE FIGURES (1-4) ON PAGE 7

SEE FIGURE 1

1. MAIN POWER SWITCH: TURNS THE MACHINE ON AND OFF.
2. VACUUM SWITCH: TURNS VACUUM MOTOR ON.
3. SOLUTION SWITCH: OPENS AND CLOSES SOLUTION VALVE.
4. SCRUB DECK SWITCH: RAISES AND LOWERS SCRUB DECK (PROVIDES AJDUSTMENT +/- FOR PRESSURE).
5. BATTERY GAUGE: INDICATES AMOUNT OF BATTERY CHARGE .
6. POWER LIGHT (GREEN): INDICATES POWER "ON".
7. DOWN PRESSURE GAUGE: INDICATES AMOUNT OF PAD/BRUSH PRESSURE.

SEE FIGURE 2

8. EMERGENCY STOP (OPTIONAL): SHUTS OFF POWER TO THE MACHINE .
9. KEY SWITCH (OPTIONAL): TURNS POWER ON TO THE MACHINE.
10. CIRCUIT BREAKER: 2 AMP RESETABLE CIRCUIT BREAKER (ACTUATOR).
11. CIRCUIT BREAKER: 25 AMP RESETABLE CIRCUIT BREAKER (VACUUM MOTOR).
12. CIRCUIT BREAKER: 30 AMP RESETABLE CIRCUIT BREAKER (SCRUB MOTOR).
13. SPRAY JET (OPTIONAL): TURNS ON THE SPRAY JET PUMP (BLUE).
14. HOUR METER: INDICATES HOW MANY HOURS THE MACHINE HAS BEEN RUN.
15. SERIAL NUMBER PLATE: MACHINE IDENTIFICATION.

SEE FIGURE 3

16. RECOVERY LID: USED FOR FLUSHING OUT RECOVERY TANK AREA WITH FRESH WATER.
17. DRIVE BUTTON: DEPRESS TO DRIVE FORWARD, RELEASE TO STOP. (STARTS & STOPS THE SCRUB MOTOR)
18. "DRAIN SAVER" STRAINER: HELPS PREVENT CLOGGING OF DRAIN PORTS.
19. VAC SCREEN: PROTECTS VAC MOTOR FROM DEBRIS.
20. CASTER: TWIN CASTERS FOR STABILITY.
21. MAIN TIRE: NON-MARKING TIRES.
22. SOLUTION VALVE: CONTROLS SOLUTION FLOW RATE, WHEN SOLUTION SWITCH IS ON.
23. SPLASH CURTAIN: HELPS CONTAIN WATER INSIDE SCRUB AREA.
24. WALL ROLLERS: HELPS PROTECT MACHINE WHEN SCRUBBING NEAR WALLS.
25. "PAD ASSIST" DRIVE ADJUSTMENT KNOB: ADJUSTS AMOUNT OF OFFSET BEING APPLIED TO BRUSH.
26. TANK-IN-TANK: SOLUTION/RECOVERY TANK(18 GALLON CAPACITY EACH).
27. SOLUTION FILL LID: FILL PORT FOR FILLING SOLUTION TANK.

SEE FIGURE 4

28. CLEAR COVER: FOR VIEWING INSIDE RECOVERY TANK AREA.
29. CONTROL PANEL: MACHINE CONTROLS.
30. RECOVERY DRAIN HOSE: ALLOWS FOR CONTROLLED DRAINING OF RECOVERY TANK.
31. RECHARGE PLUG: RED 50 USED TO RECEIVE CHARGER INPUT. *NOTE:* ONLY USE CHARGER PROVIDED.
32. BATTERIES: YOUR MACHINE IS EQUIPPED WITH TWO (12 VOLT DEEP CYCLE 140 AMP HOUR BATTERIES).
33. SQUEEGEE BLADE: RECOVERS DIRTY WATER FROM FLOOR TO BE RECOVERED BY THE VACUUM HOSE.
34. VACUUM HOSE: VACUUMIZES SQUEEGEE. *NOTE:* KEEP FREE AND CLEAR OF BLOCKAGE.
35. SQUEEGEE PITCH ADJUSTMENT: ADJUSTS PITCH OF SQUEEGEE. DEFLECTION SHOULD BE EVEN ACROSS ENTIRE BLADE.
36. SQUEEGEE LIFT POST: LIFT TO RAISE SQUEEGEE AND PUSH DOWN TO LOWER SQUEEGEE.
37. SOLUTION FILTER: HELPS CLEAN WATER IN PREPERATION FOR SCRUBBING.
38. SOLUTION LEVEL INDICATOR & DRAIN TUBE: SHOWS PRECISE LEVEL OF CLEANING SOLUTION IN TANK & DRAIN PORT.

MACHINE SETUP

UNCRATING MACHINE

CAREFULLY CHECK THE CRATE FOR ANY SIGNS OF DAMAGE AND THAT THE BATTERIES ARE IN THE UNIT.

TO UNCRATE THE MACHINE, REMOVE BANDING FROM AROUND THE CRATE. TAKE OFF THE TOP AND SIDES AND DISPOSE OF PROPERLY. REMOVE BRACKETS (A) FROM MACHINE WHEELS. REMOVE BOLTS (B) FROM PALLET THEN REMOVE BOARD (C). CAREFULLY ROLL THE MACHINE OFF OF THE BASE. *NOTIFY THE CARRIER IMMEDIATELY IF CONCEALED DAMAGE IS DISCOVERED*. *(SEE FIGURE 5.)*

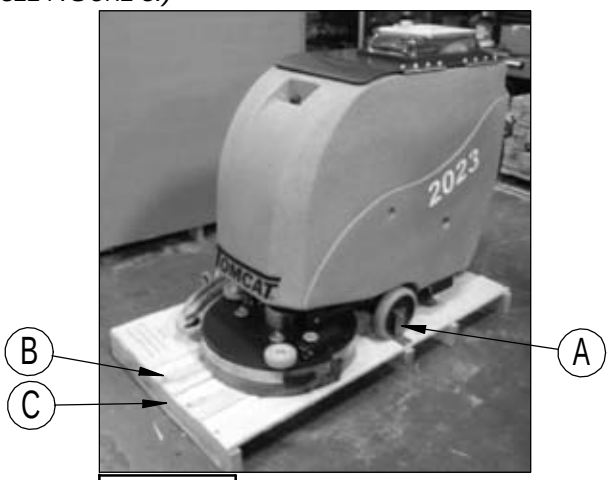

FIGURE 5.

CONNECTING BATTERIES

YOUR MACHINE IS EQUIPPED WITH (TWO) 12 VOLT, DEEP CYCLE, 140 OR 205 AMP HOURS BATTERIES, WHICH FORM A 24 VOLT SYSTEM. MAXIMUM BATTERY DIMENSIONS ARE 7" W X 15" L X 15" H. SEE PICTURE BELOW FOR CORRECT CABLE CONECTIONS.

1. TURN ALL SWITCHES TO THE OFF POSITION AND REMOVE KEY (IF MACHINE IS EQUIPPED WITH OPTIONAL KEY SWITCH).

2. TURN ON MAIN POWER SWITCH AND CHECK THE BATTERY CONDITION METER TO ENSURE CORRECT INSTALLATION. CHARGE BATTERIES IF NEEDED. (SEE: BATTERY CHARGING)

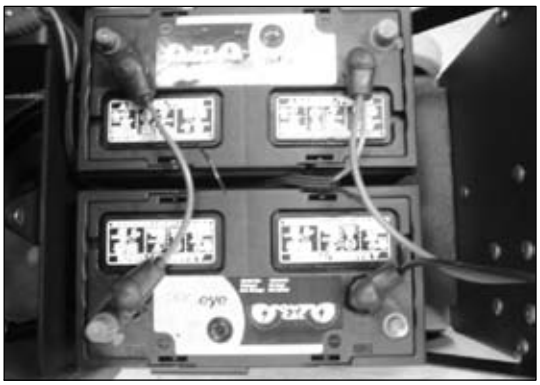

BATTERY CABLE CONNECTIONS

ATTACHING SQUEEGEE

1. LOWER THE SQUEEGEE MOUNTING PLATE BY ROTATING THE LIFT LEVER COUNTER-CLOCKWISE. *(SEE FIGURE 6.)*

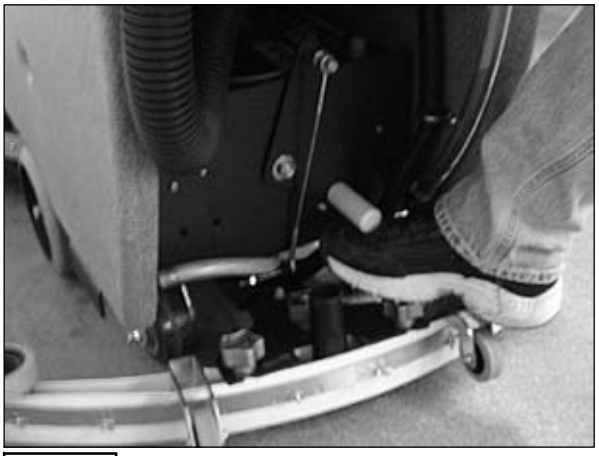

FIGURE 6.

2. LOOSEN THE TWO KNOBS ON THE SQUEEGEE AND SLIDE THEM INTO THE SLOTS IN THE SQUEEGEE MOUNTING PLATE. THE SQUEEGEE TRAIL WHEELS SHOULD FACE OUTWARD. *(SEE FIGURE 7.)*

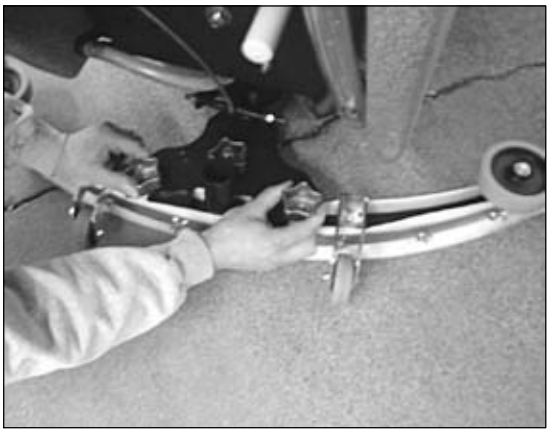

FIGURE 7.

3. TIGHTEN THE TWO KNOBS, AND CONNECT VACUUM HOSE FROM THE MACHINE TO THE SQUEEGEE. *(SEE FIGURE 8.)*

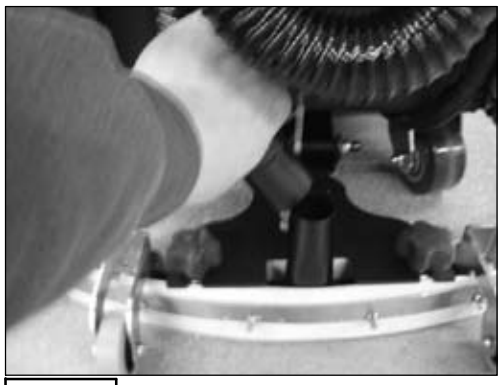

FIGURE 8.

4. YOU MAY HAVE TO ADJUST THE SQUEEGEE PITCH. *(SEE ADJUSTING SQUEEGEE NEXT PAGE)*.

ADJUSTING SQUEEGEE

1. TURNING ADJUSTMENT KNOB CLOCK-WISE (TIGHTENING) WILL RAISE TIPS & LOWER CENTER. *(SEE PICTURE BELOW)*

2. THIS SQUEEGEE IS ADJUSTED TOO FAR BACK AND WILL NOT PICK UP ON THE CORNERS. *NOTE TIPS OFF THE FLOOR. *(SEE PICTURE BELOW)*

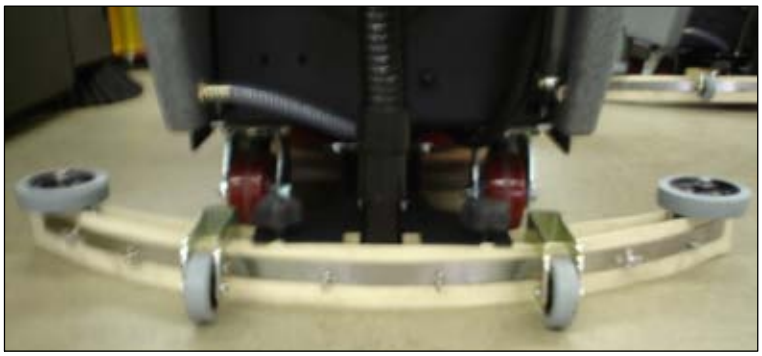

3. THIS SQUEEGEE IS ADJUSTED TOO FAR FORWARD AND WILL NOT PICK UP IN THE CENTER. *NOTE CENTER SPACED OFF THE FLOOR. *(SEE PICTURE BELOW)*

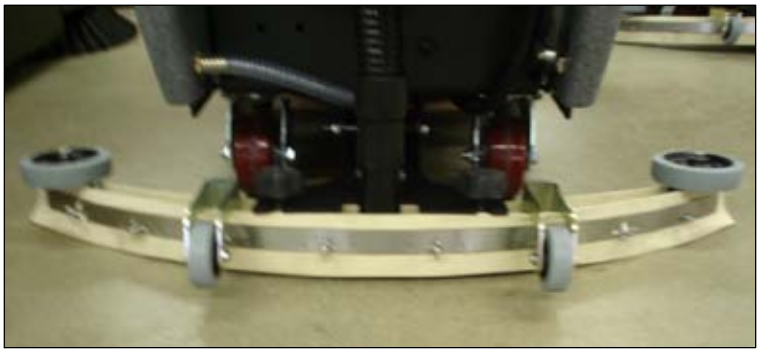

4. THIS SQUEEGEE IS ADJUSTED JUST RIGHT WITH GOOD DEFLECTION ACROSS THE ENTIRE REAR BLADE *(SEE PICTURE BELOW)*

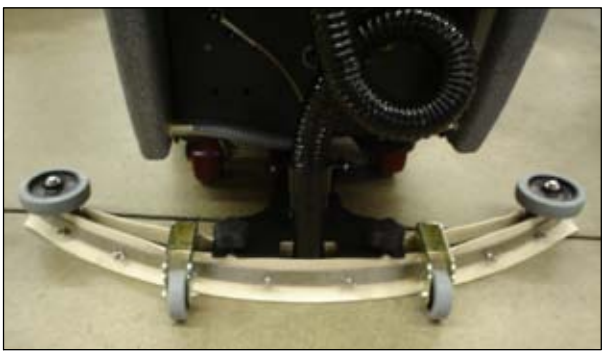

REMOVING SQUEEGEE

1. WITH THE SQUEEGEE IN THE UP POSITION, TURN MACHINE POWER OFF.

2. DISCONNECT VACUUM HOSE FROM SQUEEGEE AND LOOSEN BOTH KNOBS. *(SEE PICTURE BELOW)*

3. PULL SQUEEGEE ASSEMBLY REARWARD FROM THE LIFTING CARRIER.

4. INSPECT OR REPAIR AS NEEDED AND REINSTALL.

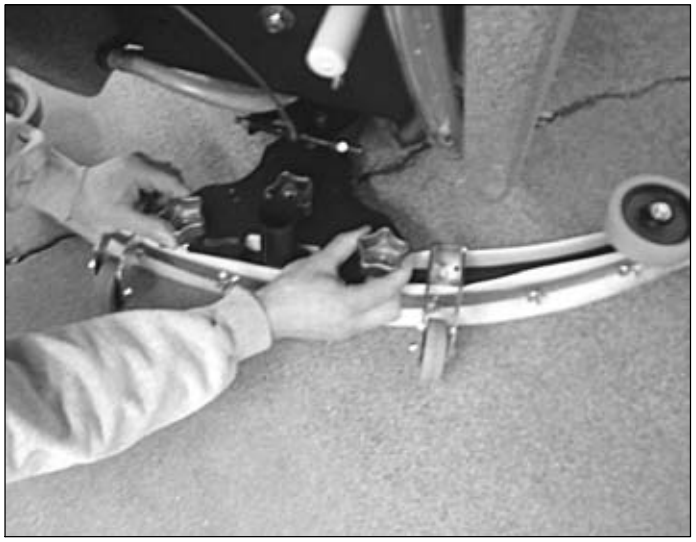

REPLACING OR ROTATE SQUEEGEE BLADES

FOR SAFETY: BEFORE LEVEING OR SERVICING MACHINE STOP ON LEVEL SURFACE, TURN OFF MACHINE AND REMOVE KEY.

1. REMOVE THE SQUEEGEE ASSEMBLY FROM THE MACHINE. REMOVE BLADE RETAINER STRAP AND REMOVE SQUEEGEE BLADE

2. ROTATE THE SQUEEGEE TO NEW EDGE POSITION OR REPLACE AS REQUIRED.

3. INSTALL BLADE ON THE LOCATING PINS OF SQUEEGEE ASSEMBLY.

4. INSTALL SQUEEGEE RETAINER STRAP.

5. FASTEN AND LOCK KNOBS.

INSTALLING PAD DRIVER OR BRUSH

1. TURN ON MACHINE POWER.
2. RAISE THE SCRUB DECK BY DEPRESSING THE BRUSH SWITCH (-) TO THE UP AND OFF POSITION AND TURN MACHINE POWER BACK OFF.
3. THE MACHINE IS EQUIPPED WITH A SHROUD. UNSCREW THE TWO KNOBS ON TOP OF THE SCRUB DECK AND REMOVE THE SHROUD. *(SEE FIGURE 9.)*

FIGURE 9.

4. SELECT THE CORRECT PADS OR BRUSHES THAT BEST MEET YOUR CLEANING APPLICATION. CONSULT YOUR LOCAL DEALER FOR ASSISTANCE.
5. *PAD INSTALATION:* ATTACH PADS TO PAD DRIVERS BEFOR CONNECTING DRIVERS TO MOTOR HUB. CENTER CLIP SHOULD CLICK TWICE. *(SEE FIGURE 10.)*

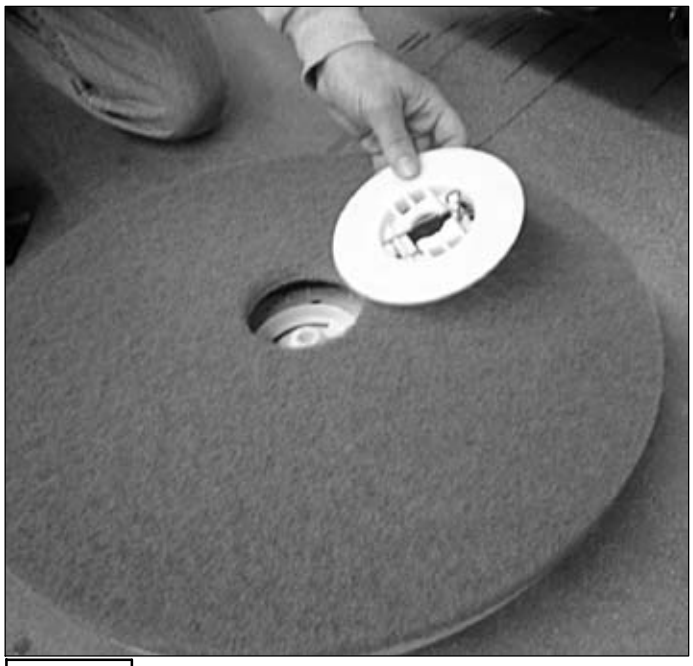

FIGURE 10.

6. ATTACH BRUSHES OR PADS TO MOTOR HUBS. SQUEEZE THE SCISSOR LOCKING DEVICE AND LIFT BRUSH UP ON TO THE MOTOR DRIVE HUB. MAKE SURE THE SCISSORS CLOSE AND LOCK ONCE THE BRUSHES ARE ON. *(SEE FIGURE 11.)*

FIGURE 11.

7. WITH BRUSHES LOCKED IN PLACE, REPLACE SHROUD AND TIGHTEN THE TWO KNOBS ON TOP OF THE SHROUD. *(SEE FIGURE 12.)*

FIGURE 12.

****FOR CORRECT PAD APPLICATION , CALL YOUR LOCAL DEALER****

OPERATION

PRE-CLEANING CHECK LIST

READ AND UNDERSTAND THE SAFETY SECTION ON PAGES 5 AND 6 BEFORE OPERATING THE MACHINE.

1. CHECK BATTERY CONDITION GAUGE ON THE CONTROL PANEL. MAKE SURE BATTERIES ARE FULLY CHARGED BEFORE USING.

2. CHECK THE CONDITION OF THE PADS OR BRUSHES.

3. CHECK THE CONDITION OF THE SQUEEGEE BLADES.

4. TRANSPORT THE MACHINE TO THE FILLING STATION. RASISE THE SCRUBHEAD AND SQUEEGEE WHEN TRANSPORTING.

5. TURN MACHINE OFF.

6. REMOVE THE SOLUTION FILL LID IN THE FRONT OF THE MACHINE AND FILL THE TANK WITH UP TO 18 GALLONS OF CLEAN WATER. *(SEE FIGURE 13.)*

* THE CLEAR TUBE AT THE REAR OF THE MACHINE INDICATES THE AMOUNT OF WATER IN THE TANK. *(SEE FIGURE 14.)*

8. ADD CLEANING CHEMICAL. USE THE PROPER DILUTION RATIO INDICATED ON THE BOTTLE.

NOTE: USE ONLY NON-FLAMMABLE COMMERCIAL CLEANING CHEMICALS. YOUR AUTHORIZED DISTRIBUTOR CAN ASSIST YOU IN SELECTING A PROPER CHEMICAL.

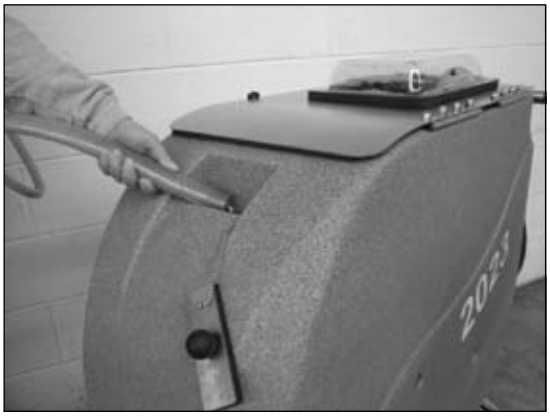

FIGURE 13 .

FIGURE 14.

OPERATING HINTS

1. OBSERVE THE AMOUNT OF SOLUTION THE MACHINE IS DISPENSING ON THE FLOOR AND ADJUST TO THE DESIRED FLOW. TO INCREASE THE SOLUTION FLOW RATE, ROTATE THE SOLUTION CONTROL KNOB. TO SHUT THE SOLUTION OFF COMPLETELY, USE THE SWITCH, OR JUST RELEASE THE DRIVE BUTTON.

2. KEEP AN EYE ON THE CLEAR VACUUM COVER TO MAKE SURE THERE IS NOT ANY FOAMY BUILDUP IN THE RECOVERY TANK. IF EXCESS FOAM BEGINS TO DEVELOP, POUR A RECOMMENDED FOAM CONTROL SOLUTION INTO THE RECOVERY TANK. FOAM IS USUALLY AN INDICATION OF EXCESSIVE SOAP.

3. ALWAYS OPERATE AT LOWER SPEEDS WHEN SCRUBBING AROUND WALLS AND OBJECTS. YOU SHOULD REDUCE THE SPEED, TO MAINTAIN CONTROL WHEN TURNING.

4. IF SQUEEGEE STARTS TO STREAK, RAISE AND WIPE THE BLADES WITH A CLEAN CLOTH. IF THE PROBLEM CONTINUES, CHECK THE BLADES FOR WEAR OR DAMAGE, AND ROTATE IF NEEDED. YOU NEED TO PRESWEEP BEFORE SCRUBBING.

5. CHANGE OR TURN OVER PADS WHEN DIRTY. ROTATE THE SCRUB BRUSHES EVERY WEEK.

6. STAY CLEAR OF OBJECTS PROTRUDING FROM THE FLOOR, SUCH AS SOCKETS, GRATES, PIES, FOR THEY WILL DAMAGE THE PADS AND SQUEEGEE BLADES.

7. DURING BRIEF STOPS YOU DO NOT HAVE TO TURN ANYTHING OFF, THE BRUSHES AND SOLUTION WILL AUTOMATICALLY STOP WHEN THE DRIVE BUTTON IS RELEASED.

8. ALWAYS KEEP AN EYE ON YOUR GAUGES. THEY LET YOU KNOW THE STATUS OF A PARTICULAR SYSTEM AT A GLANCE. IF YOUR BATTERY GAUGE IS READING LOW, YOU MUST STOP IMMEDIATELY, AND RECHARGE. RUNNING THE BATTERIES DEAD, WILL RESULT IN DAMAGE TO THE BATTERIES. EXCESSIVE SCRUBBING PRESSURE WILL BLOW A BREAKER.

9. WHEN YOU RUN OUT OF SOLUTION, RAISE THE BRUSHES, AND CONTINUE TO VACUUM THE REMAINING WATER UNTIL IT IS CONSUMED. THE SOLUTION SIGHT HOSE IS USED TO INDICATE THE LEVEL OF DETERGENT REMAINING IN THE TANK.

10. WHEN YOU ARE READY TO STOP, PICK UP THE BRUSHES, TURN OFF THE SOLUTION SWITCH, PICK UP THE SQUEEGEE, AND DRIVE THE MACHINE BACK TO THE CHARGING AREA. BE SURE TO DRAIN BOTH TANKS BEFORE STORING THE MACHINE.

ONE PASS SCRUBBING

(SEE FIGURE'S 13 & 14.)

1. TURN ON MACHINE POWER SWITCH "A" , MAKE SURE THE "PAD ASSIST" ADJUSTMENT KNOB IS A LOW SETTING.
2. LOWER SQUEEGEE BY ROTATING THE LIFT LEVER "B" COUNTER-CLOCKWISE.
3. LOWER SCRUB HEAD TO THE FLOOR, USE THE TOP HALF (+) OF THE BRUSH SWITCH "C".
4. TURN ON THE SOLUTION SWITCH "D".
5. TURN ON THE VACUUM MOTOR SWITCH "E".
6. BEGIN SCRUBBING BY DEPRESSING THE GREEN CONTROL BUTTON "F". ADJUST THE "PAD ASSIST" ADJUSTMENT KNOB TO THE DESIRED SETTING.
7. ONCE THE MACHINE BEGINS TO MOVE, CHECK THE DOWN PRESSURE GAUGE "G". START SCRUBBING AT THE MIDDLE. DO NOT SCRUB IN THE RED, OR THE CIRCUIT BREAKER WILL BLOW.
8. TO STOP THE MACHINE, LET GO OF THE GREEN CONTROL BUTTON "F".

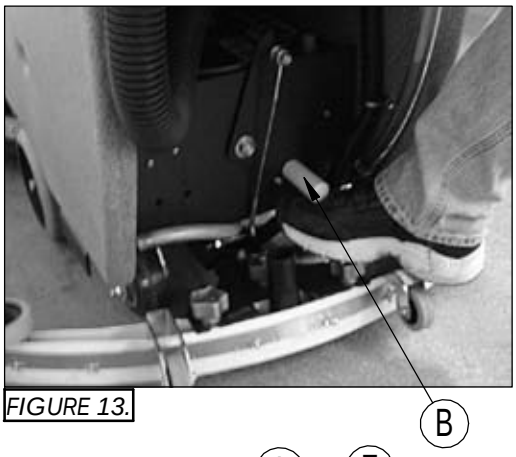

FIGURE 13.

SCRUB ONLY

(SEE FIGURE 14.)

1. TURN ON MACHINE POWER SWITCH "A", MAKE SURE THE "PAD ASSIST" ADJUSTMENT KNOB IS A LOW SETTING.
2. LOWER SCRUB HEAD TO THE FLOOR, USE THE TOP HALF (+) OF THE BRUSH SWITCH "C".
4. TURN ON THE SOLUTION SWITCH "D".
5. BEGIN SCRUBBING BY DEPRESSING THE GREEN CONTROL BUTTON "F". ADJUST THE "PAD ASSIST" ADJUSTMENT KNOB TO THE DESIRED SETTING.
6. ONCE THE MACHINE BEGINS TO MOVE, CHECK THE DOWN PRESSURE GAUGE "G". START SCRUBBING AT THE MIDDLE. DO NOT SCRUB IN THE RED, OR THE CIRCUIT BREAKER WILL BLOW.
7. TO STOP THE MACHINE, LET GO OF THE GREEN CONTROL BUTTON "F".

VACUUM ONLY

(SEE FIGURE'S 13 & 14.)

1. TURN ON MACHINE POWER SWITCH "A".
2. LOWER SQUEEGEE BY ROTATING THE LIFT LEVER "B" COUNTER-CLOCKWISE.
3. TURN ON VACUUM SWITCH "E".
4. PUSH MACHINE FORWARD OVER SOLUTION.

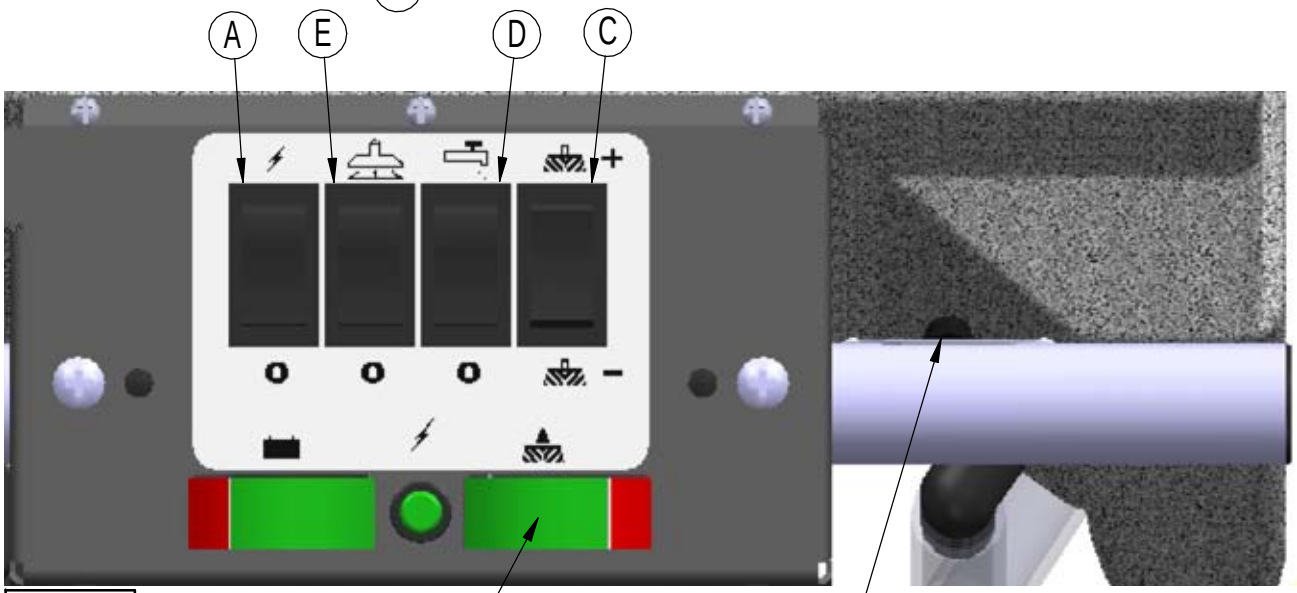

FIGURE 14.

ADJUST SOLUTION FLOW

1. TURN SOLUTION VALVE ADJUSTMENT LEVER (A) CLOCK-WISE TO INCREASE SOLUTION FLOW, COUNTER-CLOCKWISE TO DECREASE SOLUTION FLOW. *(SEE FIGURE 15.)*

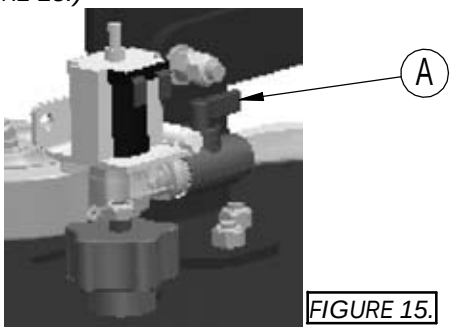

FIGURE 15.

ADJUST SHROUD CURTAIN

1. RELEASE LATCH ON SIDE OF SCRUBDECK SHROUD TO LOOSEN CURTAIN BANDS. *(SEE FIGURE 16.)*

2. RAISE OR LOWER CURTAIN TO DESIRED HEIGHT.

3. RECONNECT LATCH AND SNAP SHUT TO TIGHTEN BANDS.

FIGURE 16.

ADJUST "PAD ASSIST" DRIVE

1. TURN ADJUSTMENT KNOB CLOCK-WISE TO INCREASE DRIVE SPEED. *(SEE FIGURE 17.)*

2. TURN KNOB COUNTER-CLOCKWISE TO DECREASE DRIVE SPEED.

FIGURE 17.

DRAINING SOLUTION TANK

TO DRAIN LEFT OVER CLEANING SOLUTION FROM THE SOLUTION TANK, PERFORM THE FOLLOWING STEPS. *(SEE FIGURE 18.)*

1. PULL THE CLEAR SIGHT TUBE/DRAIN HOSE OFF BARBED ELBOW.

2. RINSE OUT TANK AND SOLUTION FLOW SYSTEM WITH CLEAN WATER.

FIGURE 18.

DRAINING RECOVERY TANK

ALWAYS EMPTY RECOVERY TANK WHEN REFILLING THE SOLUTION TANK. YOU CAN REFILL THE SOLUTION TANK WHILE THE RECOVERY TANK IS DRAINING. TO DRAIN THE RECOVERY TANK, PERFORM THE FOLLWING STEPS.

1. REMOVE DRAIN HOSE FROM THE J-HOOK AND REMOVE THE CAP. *(SEE FIGURE 19.)*

FIGURE 19.

OPEN RECOVERY LID

1. RELEASE BOTH LATCHES ON RECOVERY TANK LID. *(SEE FIGURE 20.)*

2. ROTATE LID FULLY OPEN.

FIGURE 20.

FLUSH RECOVERY TANK

1. RINSE THE RECOVERY TANK AFTER EVERY USE. THIS WILL PREVENT HEAVY BUILDUP ON THE BOTTOM OF THE TANK, FOUL ODERS, AND CLOGGING OF THE DRAIN HOSE. *(SEE FIGURE 21.)*

FIGURE 21.

2. ONCE THE TANK IS EMPTY, PUT DRAIN HOSE CAP ON AND TIGHTEN BY TURNING CLOCK WISE. REINSTALL ON J-HOOK. *(SEE FIGURE 22.)*

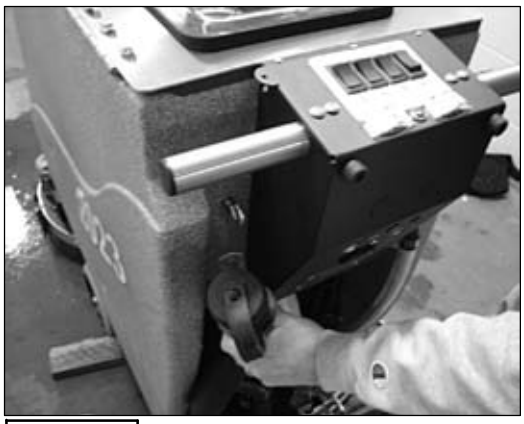

FIGURE 22.

CLEAN "DRAIN SAVER"

WITH RECOVERY LID OPEN & TANK FULLY DRAINED

1. REMOVE 2" SQUEEGEE INTAKE HOSE FROM "DRAIN SAVER" STRAINER. *(SEE FIGURE 23.)*

2. REMOVE STAINLESS SCREEN, DISPOSE OF DEBRIS.

3. RINSE SCREEN WITH FRESH WATER FROM THE OUTSIDE TO THE INSIDE HOLDING SCREEN UPSIDE DOWN. THIS WILL ALLOW FOR BETTER CLEANING.

4. REPLACE THE SCREEN INTO THE BRACKET.

5. REPLACE 2" SQUEEGEE INTAKE HOSE.

FIGURE 23.

CLEAN VAC SCREEN

WITH RECOVERY LID OPEN & TANK FULLY DRAINED

1. REMOVE VAC SCREEN RETAINING CLIP "A". *(SEE FIGURE 24.)*

2. PULL VAC SCREEN AND FLOAT BALL ASSEMBLY OFF THE VAC BOX.

3. RINSE WITH HOT WATER.

4. DRY THOROUGHLY.

5. REPLACE VAC SCREEN ONTO BOX.

6. REPLACE AND TIGHTEN RETAINING CLIP.

FIGURE 24.

TIP TANK

1. FULLY DRAIN SOLUTION TANK.
2. FULLY DRAIN RECOVERY TANK.
3. TO REMOVE TANK BOLTS, USE 3/16" ALLEN WRENCH "A" PROVIDED WITH MACHINE, LOCATED ON SIDE OF SCRUBDECK LIFTING BRACKET. *(SEE FIGURE 25.)*
4. REMOVE BOLTS ON SIDES OF TANK. *(SEE FIGURE 26.)*
5. REMOVE SQUEEGEE.
6. TIP BACK TANK CAREFULLY UNTIL ON THE GROUND. *(SEE FIGURE 27.)*

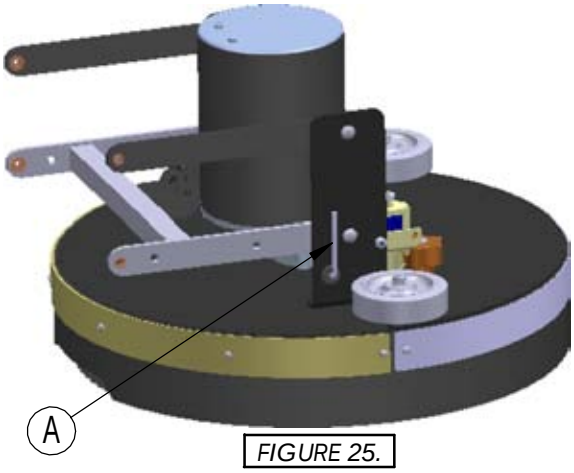

FIGURE 25.

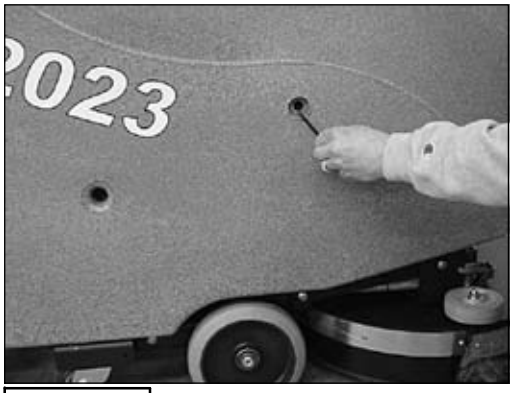

FIGURE 26.

FIGURE 27.

SQUEEGEE UP

1. PLACE BOTH HANDS ON THE HANDLE BAR.
2. USE RIGHT FOOT TO PRESS DOWN ON SQUEEGEE LIFT POST (YELLOW SLEEVE). *(SEE FIGURE 28.)*
3. PRESS DOWN COMPLETELY AND SQUEEGEE WILL LOCK INTO "UP" POSITION.

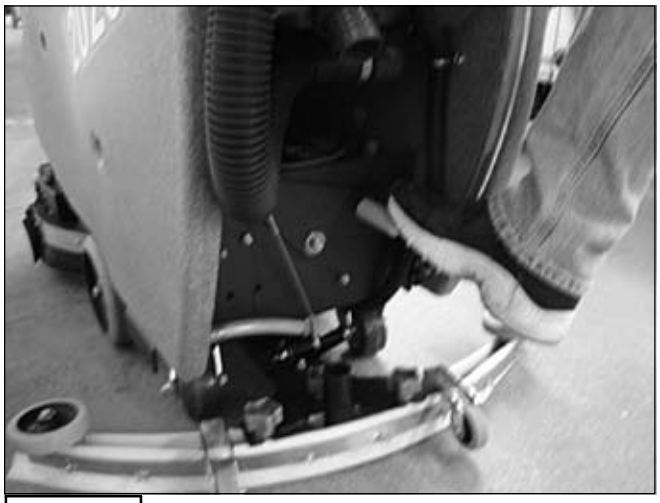

FIGURE 28.

SQUEEGEE DOWN

1. PLACE BOTH HANDS ON THE HANDLE BAR.
2. USE RIGHT FOOT TO LIFT UP ON SQUEEGEE LIFT POST (YELLOW SLEEVE). *(SEE FIGURE 29.)*

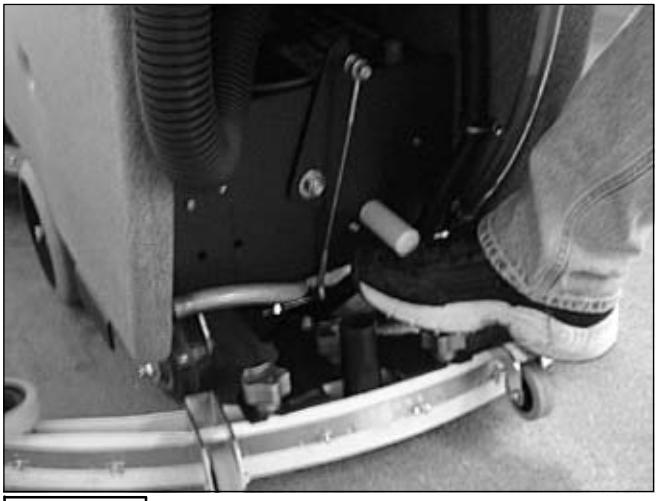

FIGURE 29.

DECK HEIGHT ADJUSTMENT

1. TO ADJUST DECK HEIGHT FOR BRUSH CLEARANCE, TURN ADJUSTMENT BOLT "A" CLOCK-WISE TO RAISE DECK, COUNTER-CLOCKWISE TO LOWER DECK. *(SEE FIGURE 33.)*

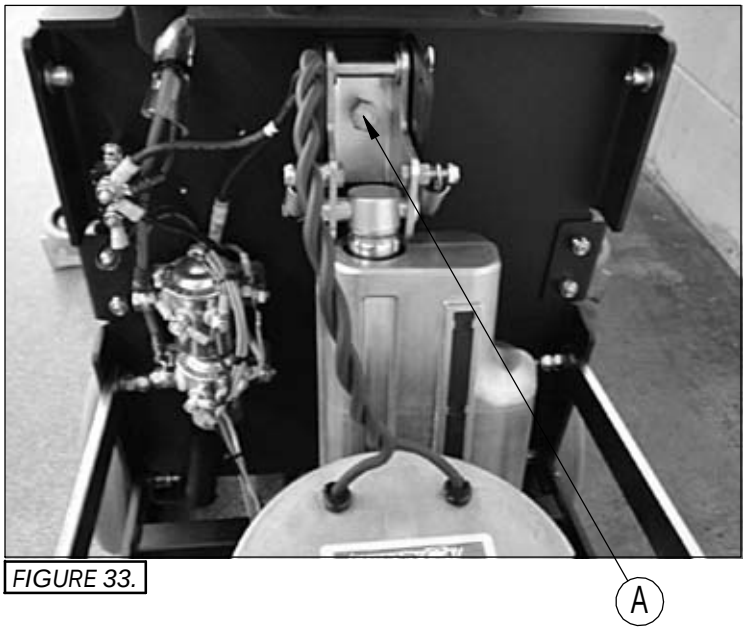

FIGURE 33.

VAC MOTOR

(SEE FIGURE 34.)

1. THE MACHINE IS EQUIPPED WITH A 24 VOLT, 3HP, VAC MOTOR (A).

2. IF FOAM OR WATER GETS PAST THE RECOVERY TANK'S VAC SCREEN/BALL SYSTEM THE *"UNLOADER VALVE"* (B) WILL DRAIN IT FROM THE *"VAC BOX"* (C).

3. THE VAC MOTOR HAS A *"FOAM MUFFLER"* (D) ATTACHED FOR QUIET MACHINE OPERATION.

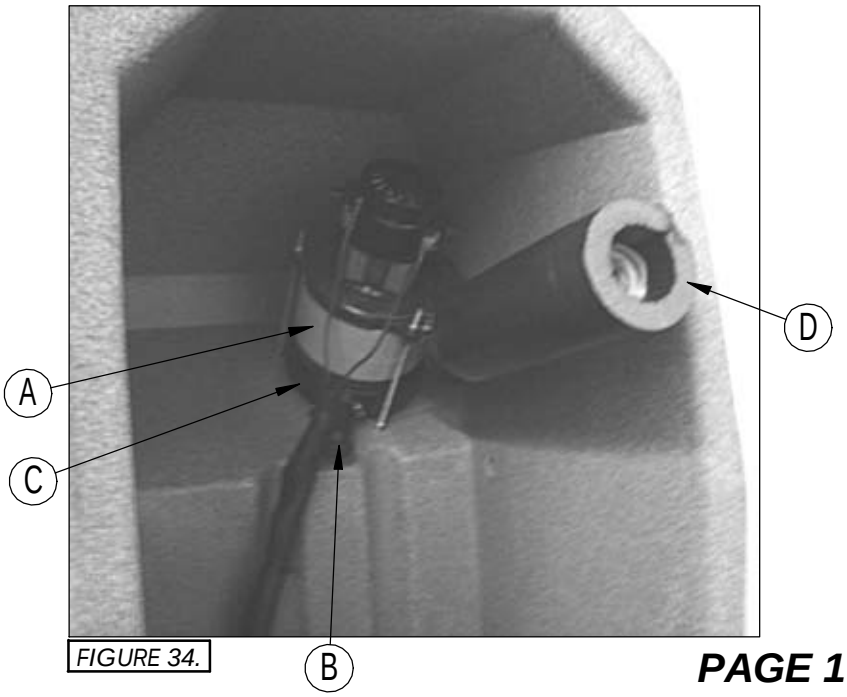

FIGURE 34.

SOLUTION FILTER

1. THE SOLUTION SYSTEM HAS A *"INLINE FILTER"* (A) TO FILTER OUT CLEANING SOLUTION PRIOR TO SCRUBBING. *(SEE FIGURE 35.)*

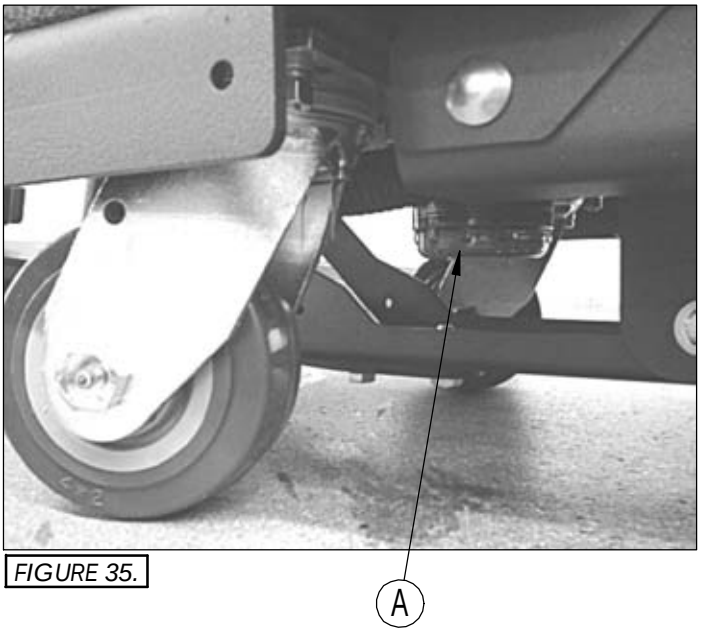

FIGURE 35.

CLEANING SOLUTION FILTER

(SEE FIGURE 36.)

1. TO CLEAN THE *"SOLUTION FILTER"* UNSCREW THE CLEAR CAP (A) FROM HOUSING (B) AND REMOVE THE *"STAINLESS STEEL"* SCREEN (C).

2. RINSE ANY DEBRIS FROM THE SCREEN WITH CLEAN WATER.

3. REINSTALL SCREEN AND SCREW CAP BACK ON TIGHTLY.

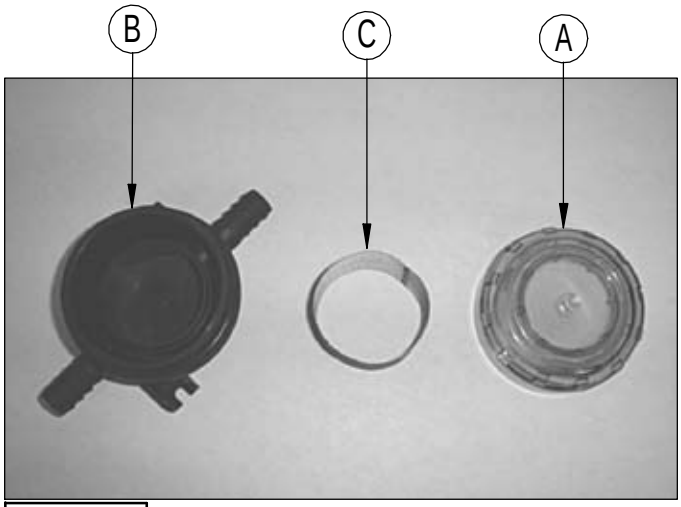

FIGURE 36.

BATTERY CHARGING

CAUTION: THE FOLLOWING INSTRUCTIONS ARE INTENDED FOR THE 24V CHARGER SUPPLIED WITH THE MACHINE. DO NOT USE ANY OTHER CHARGER WITH THIS MACHINE.

CHARGER SPECIFICATIONS

* OUTPUT VOLTAGE OF 24 VOLTS.
* OUTPUT CURRENT OF 18 AMPS MAX.
* INPUT VOLTAGE OF 110 VOLTS/60 HZ.
* AUTOMATIC SHUT OFF CIRCUIT.
* MADE FOR DEEP CYCLE BATTERIES.

FIGURE 30.

DANGER: ALWAYS CHARGE BATTERIES IN A WELL VENTILATED AREA. BATTERIES EMIT HYDROGEN GAS. EXPLOSION OR FIRE CAN RESULT. KEEP SPARKS AND FLAME AWAY. SHIELD EYES WHEN SERVICING BATTERIES AND AVOID CONTACT WITH BATTERY ACID.

1. TRANSPORT MACHINE TO A WELL VENTILATED AREA FOR CHARGING.
2. TURN THE MACHINE OFF.
3. *CAUTION ALWAYS WEAR EYE PROTECTION WHEN BATTERIES ARE EXPOSED.*
4. CHECK THE WATER LEVEL THROUGH "PRO-EYE" WINDOW IN EACH BATTERY. *(SEE FIGURE 30.)* DO NOT CHARGE THE MACHINE UNLESS THE WATER IS SLIGHTLY HIGHER THAN THE PLATES. IF NEEDED, ADD ENOUGH *DISTILLED* WATER TO JUST SLIGHTLY COVER THE PLATES. DO NOT OVER FILL. BATTERIES CAN OVERFLOW DURING CHARGING. REPLACE CAPS BEFORE CHARGING.
5. WITH THE RED 50 CHARGER PLUG DISCONNECTED FROM THE MACHINE, PLUG THE CHARGER POWER CORD INTO A GROUNDED 110 VOLT STANDARD WALL OUTLET. *(SEE FIGURE 31.)*
6. CONNECT THE RED 50 CHARGER PLUG INTO THE BATTERY CHARGING PORT LOCATED AT THE REAR OF THE MACHINE. *(SEE FIGURE 32.)*
7. THE CHARGER WILL AUTOMATICALLY BEGIN CHARGING, AND AUTOMATICALLY SHUT OFF WHEN FULLY CHARGED. (CHECK GAUGE)
8. AFTER THE CHARGER HAS TURNED OFF, UNPLUG THE CHARGER FROM THE WALL OUTLET *FIRST*, THEN UNPLUG THE RED 50 CHARGER PLUG FROM THE MACHINE *SECOND*.
9. RECHECK THE CELL LEVEL AFTER CHARGING. IF NEEDED, ADD DISTILED WATER UP TO THE CORRECT LEVEL. BE CERTAIN TO REPLACE THE CAPS SECURELY AND TO WIPE OFF THE TOP OF THE BATTERIES WITH A CLEAN CLOTH.

FIGURE 31.

FIGURE 32.

MAINTENANCE

DAILY MAINTENANCE

1. REMOVE AND CLEAN PADS OR BRUSHES. NEVER USE SOILED PADS WHEN CLEANING. REPLACE PADS WHEN THEY BECOME PACKED WITH RESIDUE.
2. REMOVE AND CLEAN DEBRIS FROM THE FLOAT SHUT-OFF SCREEN LOCATED INSIDE THE RECOVERY TANK.
3. DRAIN AND RINSE TANKS THOROUGHLY INSPECT VACUUM HOSE FOR ANY OBJECTS OBSTRUCTING THE AIR FLOW.
4. RAISE SQUEEGEE AND WIPE BLADES WITH A CLEAN CLOTH. STORE SQUEEGEE IN THE RAISED POSITION TO PREVENT DAMAGE OR SETTING OF THE BLADES.
5. WIPE DOWN MACHINE IF NEEDED. USE A NONABRASIVE, NON SOLVENT CLEANER, OR A CLEAN DAMP CLOTH.
6. RECHARGE THE BATTERIES IF NEEDED.

MONTHLY MAINTENANCE

1. CHECK SCRUB HEAD AND SQUEEGEE LIFTING CABLES FOR WEAR AND SPRING TENSION.
2. CHECK MACHINE FOR WATER LEAKS AND LOOSE NUTS AND BOLTS.
3. CHECK TO SEE IF BATTERY CABELS ARE TIGHTENED (TIGHTEN IF NEEDED)
4. CHECK PARKING BREAKE
5. CHECK CONDITION OF SCRUB DECK LIFTING CABLE.

WEEKLY MAINTENANCE

1. CHECK BATTERY WATER LEVEL IN EACH CELL OF THE BATTERIES, AND FILL AS NEEDED. ALWAYS USE DISTILLED WATER TO REFILL BATTERIES. BATTERIES SHOULD BE FILLED APPROXIMATELY 3/4" TO 1" ABOVE THE PLATES. OVERFILLING WILL CAUSE THE BATTERIES TO LEAK DURING CHARGING. THE CHARGING PROCESS CREATES GAS BUBBLES INSIDE THE BATTERY, WHICH EFFECTIVELY INCREASES THE VOLUME OF THE ELECTROLITE.
2. CLEAN BATTERY TOPS TO PREVENT CORROSION.

YEARLY MAINTENANCE

1. CALL YOUR LOCAL DEALER FOR YEARLY MAINTENACE

STORING MACHINE

1. BE SURE TO FLUSH THE TANKS OUT COMPLETELY, AND TO DRAIN ALL WATER FROM THE MACHINE.
2. REMOVE THE RECOVERY TANK LID TO PROMOTE AIR CIRCULATION.
3. RAISE BRUSHES AND SQUEEGEE.

PREVENTATIVE MAINTENANCE RECORDS

USE THIS FORM TO MAKE COPIES FOR YOUR INTERNAL RECORDS

PREVENTATIVE MAINTENANCE	CHECKED	NOTE
ROTATE BRUSHES	_____	_____
DRAIN SOLUTION TANK	_____	_____
FLUSH SOLUTION SYSTEM	_____	_____
CLEAN SOLUTION SCREEN	_____	_____
DRAIN RECOVERY TANK	_____	_____
FLUSH RECOVERY TANK	_____	_____
CLEAN VACUUM SCREEN	_____	_____
ROTATE REAR SQUEEGEE BLADE	_____	_____
CHECK BATTERY WATER LEVEL	_____	_____
CHECK BATTERY VOLTAGE	_____	_____
CHECK CHARGER CONDITION	_____	_____
CHECK BATTERY CONNECTIONS	_____	_____
CHECK CHEMICAL LEVEL	_____	_____
CHECK MACHINE PERFORMANCE	_____	_____
SCRUBBING POWER	_____	_____
VACUUM POWER	_____	_____
CONTROLS WATER ON TURNS	_____	_____
GAUGES AND CONTROLS	_____	_____
CHECK WHEEL TRACTION	_____	_____
OTHER:_____	_____	_____
OTHER:_____	_____	_____

PAST HOUR METER READING: _____

CURRENT HOUR METER READING: _____

AVERAGE WEEKLY USAGE: _____

TECHNICIAN PRINT:_____

TECHNICIAN SIGNATURE:_____ DATE:_____

MANAGER SIGNATURE:_____ DATE:_____

PREVENTATIVE MAINTENANCE RECORDS

USE THIS FORM TO MAKE COPIES FOR YOUR INTERNAL RECORDS

PREVENTATIVE MAINTENANCE	CHECKED	NOTE
ROTATE BRUSHES	_____	_____
DRAIN SOLUTION TANK	_____	_____
FLUSH SOLUTION SYSTEM	_____	_____
CLEAN SOLUTION SCREEN	_____	_____
DRAIN RECOVERY TANK	_____	_____
FLUSH RECOVERY TANK	_____	_____
CLEAN VACUUM SCREEN	_____	_____
ROTATE REAR SQUEEGEE BLADE	_____	_____
CHECK BATTERY WATER LEVEL	_____	_____
CHECK BATTERY VOLTAGE	_____	_____
CHECK CHARGER CONDITION	_____	_____
CHECK BATTERY CONNECTIONS	_____	_____
CHECK CHEMICAL LEVEL	_____	_____
CHECK MACHINE PERFORMANCE	_____	_____
SCRUBBING POWER	_____	_____
VACUUM POWER	_____	_____
CONTROLS WATER ON TURNS	_____	_____
GAUGES AND CONTROLS	_____	_____
CHECK WHEEL TRACTION	_____	_____
OTHER:_____	_____	_____
OTHER:_____	_____	_____

PAST HOUR METER READING: _____

CURRENT HOUR METER READING: _____

AVERAGE WEEKLY USAGE: _____

TECHNICIAN PRINT:_____

TECHNICIAN SIGNATURE:_____ DATE:_____

MANAGER SIGNATURE:_____ DATE:_____

TROUBLE SHOOTING

PROBLEM	CAUSE	SOLUTION
NO POWER, NOTHING OPERATES	FAULTY POWER SWITCH	CONTACT LOCAL SERVICING DEALER
	BATTERIES NEED CHARGING	SEE CHARGING BATTERIES
	FAULTY BATTERY	REPLACE BATTERY
	LOOSE BATTERY CABLE	TIGHTEN LOOSE CABLE
	MAIN CIRCUIT BREAKER TRIPPED	WAIT 5 MINUTES FOR AUTO RESET
		DETERMINE CAUSE AND CORRECT
BRUSH MOTOR(S) DO NOT OPERATE	GREEN BUTTON IS NOT DEPRESSED	DEPRESS BUTTON ON HANDLE BAR
	30 AMP CIRCUIT BREAKER TRIPPED	RESET & REDUCE PRESSURE
		DETERMINE CAUSE AND CORRECT
	CARBON BRUSHES WORN	CONTACT LOCAL SERVICING DEALER
	FAULTY BRUSH MOTOR OR WIRES	CONTACT LOCAL SERVICING DEALER
VACUUM MOTOR DOES NOT OPERATE	FAULTY VACUUM SWITCH	REPLACE SWITCH
	25 AMP CIRCUIT BREAKER TRIPPED	RESET & CHECK HOSE
		DETERMINE CAUSE AND CORRECT
	FAULTY VACUUM MOTOR	CONTACT LOCAL SERVICING DEALER
	CARBON BRUSHES WORN	CONTACT LOCAL SERVICING DEALER
INSUFFICIENT SOLUTION FLOW	SOLUTION TANK LOW	REFILL SOLUTION TANK
		TURN KNOB MORE OPEN
	FLOW KNOB TURNED DOWN	REMOVE COVER AND CLEAN
	SOLUTION FILTER CLOGGED	REMOVE AND BLOW OUT WITH
	SOLUTION LINE CLOGGED	COMPRESSED AIR
		REMOVE COVER AND CLEAN
	SOLUTION VALVE CLOGGED	

TROUBLE SHOOTING

PROBLEM	CAUSE	SOLUTION
NO SOLUTION FLOW	NO SOLUTION IN TANK	FILL SOLUTION TANK
	SOLUTION SWITCH OFF	TURN SOLUTION SWITCH ON
	SOLUTION SCREEN CLOGGED	REMOVE AND CLEAN SCREEN
	FAULTY SOLUTION SOLENOID	CONTACT LOCAL SERVICING DEALER
	FAULTY SOLUTION SWITCH	CONTACT LOCAL SERVICING DEALER
POOR WATER RECOVERY	RECOVERY TANK IS FULL	EMPTY RECOVERY TANK
	BALL/SCREEN IS CLOGGED	REMOVE SCREEN AND CLEAN
	VACUUM HOSE IS CLOGGED	REMOVE DEBRIS
	SQUEEGEE IS CLOGGED	REMOVE DEBRIS
	SQUEEGEE BLADE IS WORN	ROTATE OR REPLACE BLADES
	FAULTY VACUUM HOSE	CONTACT LOCAL SERVICING DEALER
	VACUUM MOTOR GASKET TORN	CONTACT LOCAL SERVICING DEALER
	TANK GASKET FAULTY	CONTACT LOCAL SERVICING DEALER
	DRAIN PLUG LOOSE	TIGHTEN
	VAC MOTOR FAULTY	CONTACT LOCAL SERVICING DEALER
	BATTERY CHARGE LOW	CHARGE BATTERIES OVERNIGHT
POOR WATER RECOVERY ON TURNS	WIPERS WORN	REPLACE WIPER MATERIAL
	WIPERS CHATTER	TIGHTEN PIVOT POINTS
	SQUEEGEE SWING IS BINDING	CONTACT LOCAL SERVICING DEALER
	INCORRECT SQUEEGEE SIZE	CONTACT LOCAL SERVICING DEALER
TIRES NOISY	BEARING DRY	GREASE BEARINGS
	FAULTY HUBS	CONTACT LOCAL SERVICING DEALER
POOR TRACTION	EXCESSIVE BRUSH PRESSURE	REDUCE PRESSURE WITH SWITCH
	WORN DRIVE TIRE	REPLACE TIRES
	HEAVY SOAP CONCENTRATION	CONTACT LOCAL SERVICING DEALER
SHORT RUN TIME	BATTERIES RUN DOWN	CHARGE BATTERIES TWICE
	BATTERIES STILL DOWN	CONTACT LOCAL SERVICING DEALER
	BATTERIES LOW ON WATER	FILL WITH DISTILLED WATER TO 3/4" ABOVE THE LEAD PLATES
	BATERIES OVER CYCLED	CONTACT LOCAL SERVICING DEALER

PAGE 22 - CONTINUED

MODEL 2023/2017 SERIES

MACHINE PARTS SECTION

ACTUATOR LIFT ASSEMBLY

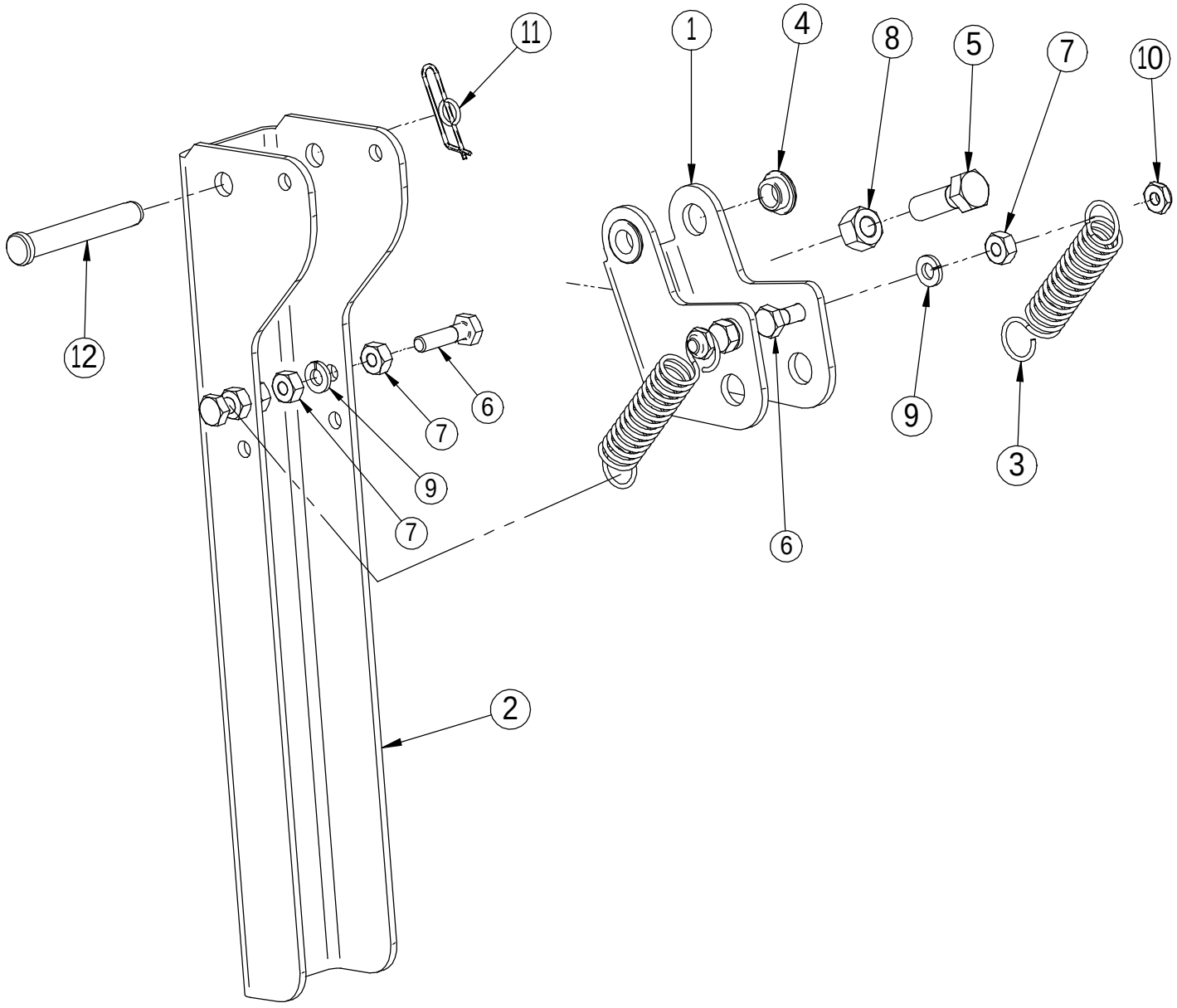

ACTUATOR LIFT ASSEMBLY

Item	Part Number	Part Description	Qty
1	190-1150	ACTUATOR ARM	1
2	190-1155	ACTUATOR ANCHOR	1
3	21-6000	DOWN PRESSURE SPRING	2
4	290-1233	3/8" ID, 1/2" OD, 1/4" LG BEARING	2
5	H-01219	HCS 3/8"- 24 X 1 1/8" SS	1
6	H-70005	HCS 1/4"- 20 X 1" SS	4
7	H-70710	HN 1/4"- 20 SS	6
8	H-70732	HN 3/8"- 24 SS	1
9	H-71063	LW 1/4" SS	4
10	H-NJ04C	JNYL 1/4" - 20 SS	2
11	H-RUE14	3/8" RUE RING COTTER	1
12	H-ZCP170	CLEVIS PIN 3/8" x 2.50"	1

SQUEEGEE TRAIL ARM ASSEMBLY

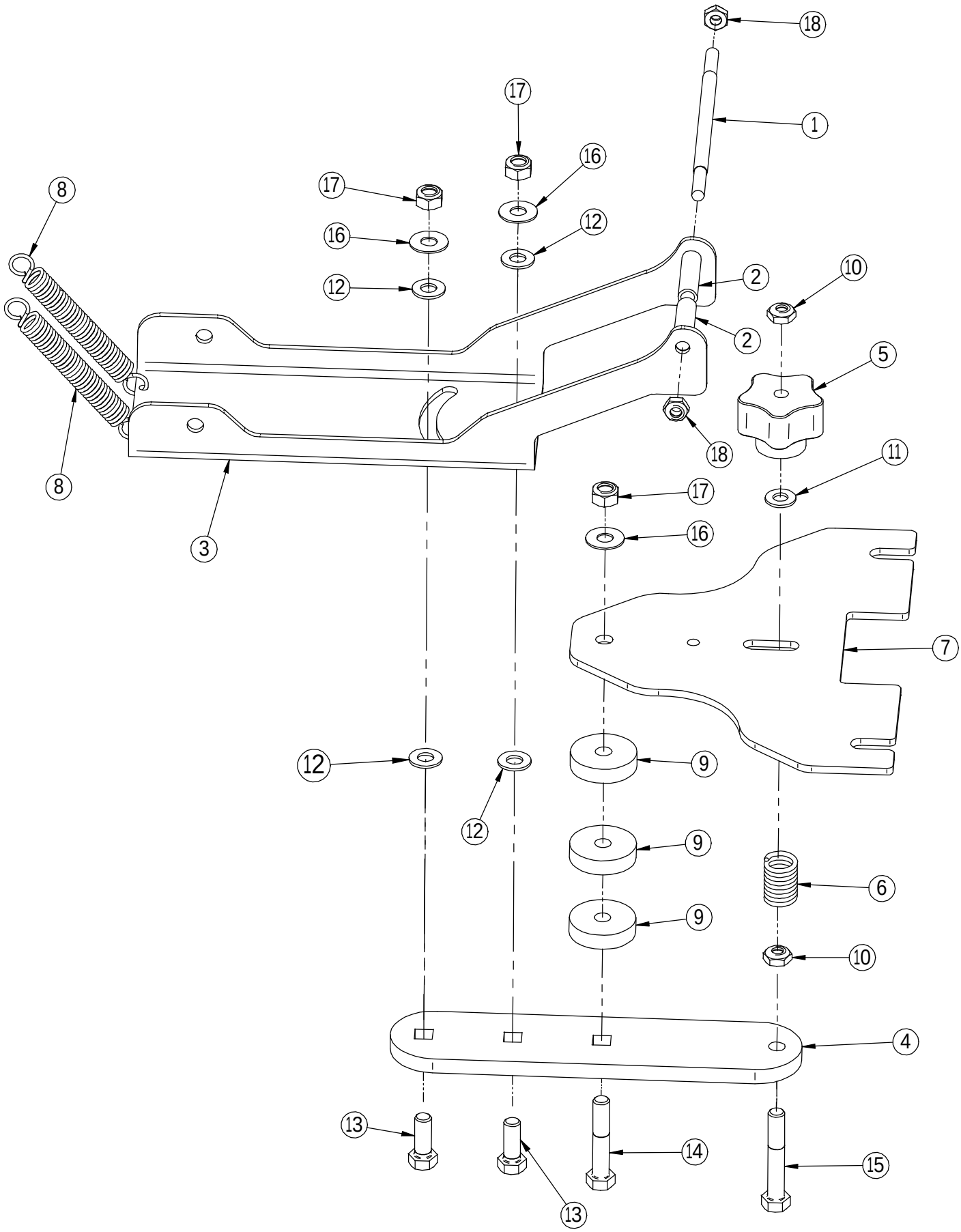

SQUEEGEE TRAIL ARM ASSEMBLY

Item	Part Number	Part Description	Qty
1	10055418	5/16-18 X 5-1/2" DOUBLE ENDED STUD S/S	1
2	190-1055	TUBE, 5/16" ID X 7/16" OD X 1-5/8" LG	2
3	190-7140	SQUEEGEE SWING PLATE	1
4	190-7150	SQUEEGEE TRAIL ARM	1
5	21-7205	STAR KNOB	1
6	21-7240	SPRING, 1/2" ID X 1-3/4" LG	1
7	21-7610	SQUEEGEE TRIANGLE PLATE	1
8	390-7712	COMPRESSION SPRING	2
9	4-446	GROMMET-3/8 ID X 1-1/2 OD X .375	3
10	H-0171004	JNYL 3/8- 24 SS	2
11	H-33080	FW 5/16" SAE	1
12	H-4440024	FW 3/8" X 3/4" NYLON	4
13	H-70105	HCS 3/8"- 16 X 1" SS	2
14	H-70111	HCS 3/8"- 16 X 2" SS	1
15	H-70136	HCS 3/8"- 24 X 2 1/4" SS	1
16	H-71017	FW 3/8" X 7/8" SS	3
17	H-77862	NYLOK 3/8"- 16 SS	3
18	H-NJ05C	JNYL 5/16"- 18 SS	2

AXLE SUPPORT ASSEMBLY

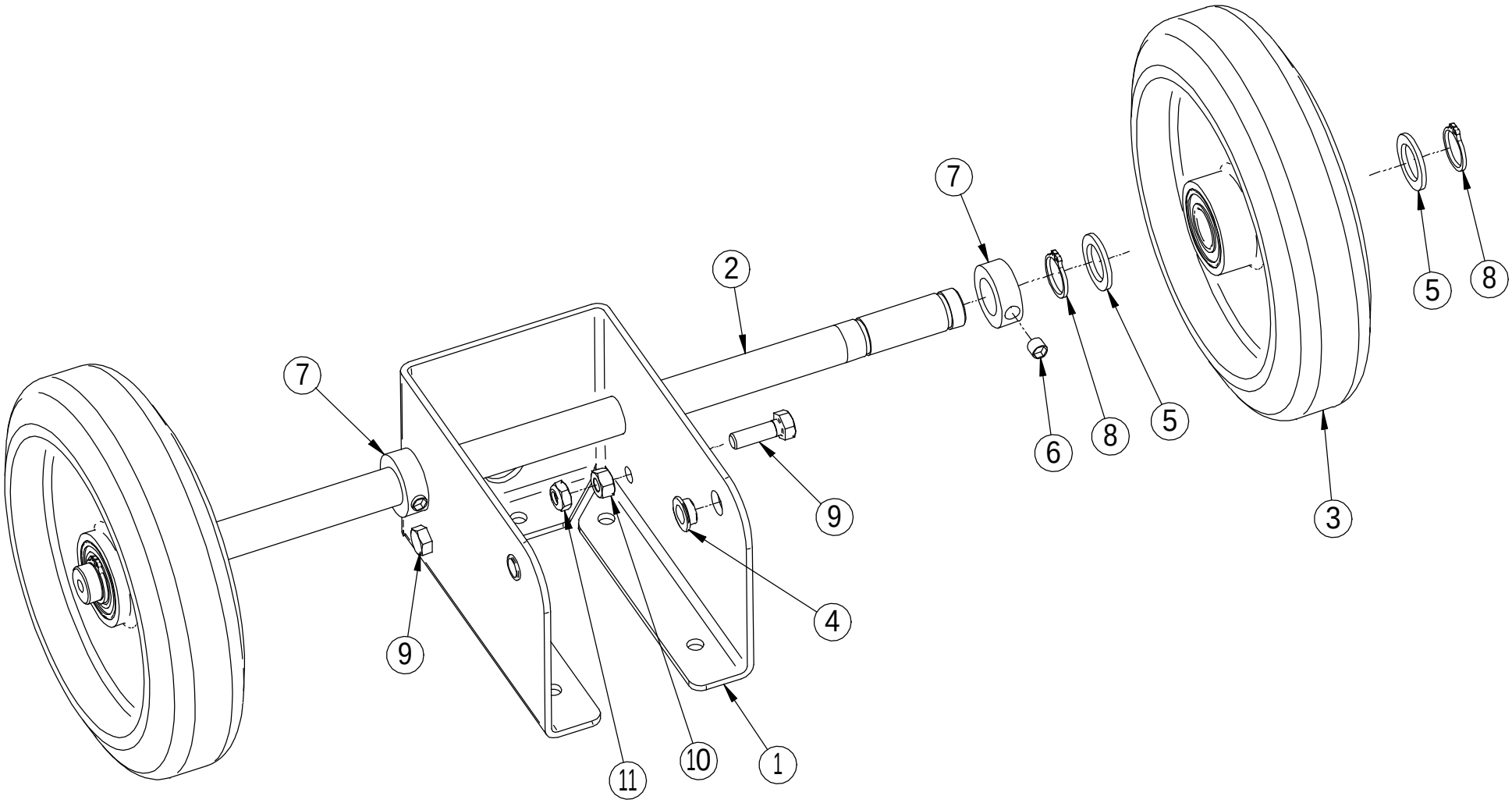

NOTE: LEAVE JAM NYLOK NUT ITEM #11 AT END OF BOLT THREADS ITEM #9.
SPRINGS FROM TRAIL ARM ASSEMBLY WILL GO BETWEEN THE TWO NUTS.

AXLE SUPPORT ASSEMBLY

Item	Part Number	Part Description	Qty
1	190-1020	AXLE SUPPORT	1
2	190-1170	AXLE	1
3	190-6175	DRIVE TIRE 8" x 2" (GREY)	2
4	290-1233	3/8" ID, 1/2" OD, 1/4" LG BEARING	2
5	H-00222	FW 3/4 X 1 1/8 X 3/32 SS	4
6	H-25435	SSS CP 5/16" X 1/4"	2
7	H-33376	SET SCREW SHAFT COLLAR, 3/4" ID X 9/16 LG	2
8	H-68015	SNAPRING 3/4"	4
9	H-70055	HCS 5/16"- 18 X 1" SS	2
10	H-70711	HN 5/16"- 18 SS	2
11	H-NJ05C	JNYL 5/16"- 18 SS	2

SQUEEGEE SUSPENSION

NOTE: ATTACH SPRINGS BETWEEN NUTS ITEMS 10 & 11 ON AXLE SUPPORT ASSEMBLY.

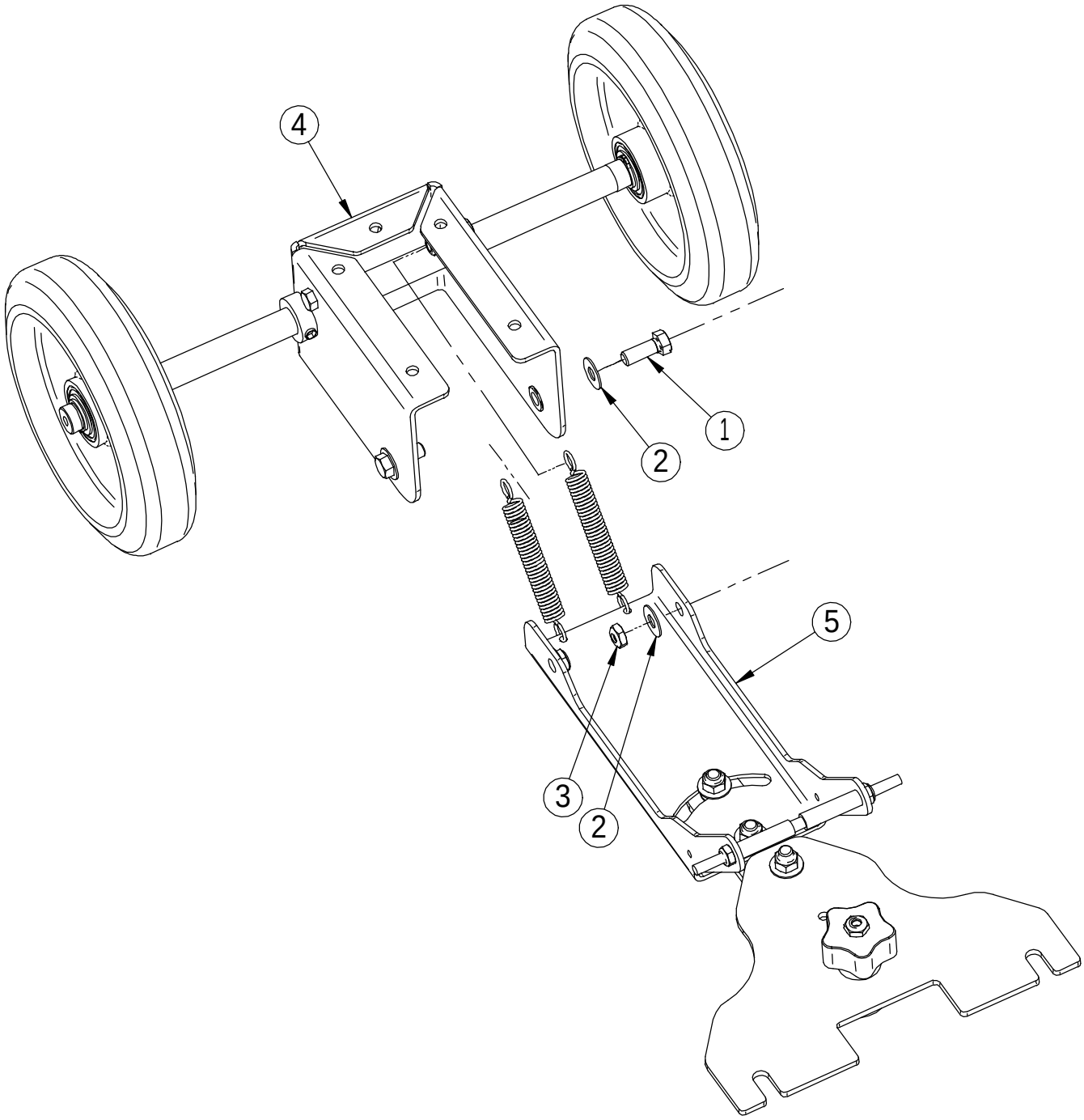

SQUEEGEE SUSPENSION

Item	Part Number	Part Description	Qty
1	H-70105	HCS 3/8"- 16 X 1" SS	2
2	H-71017	FW 3/8" X 7/8" SS	4
3	H-NJ06C	JNYL 3/8- 16 SS	2
4	N/A	AXLE SUPPORT ASSEMBLY	1
5	N/A	SQUEEGEE TRAIL ARM ASSEMBLY	1

2023 FRAME FRONT

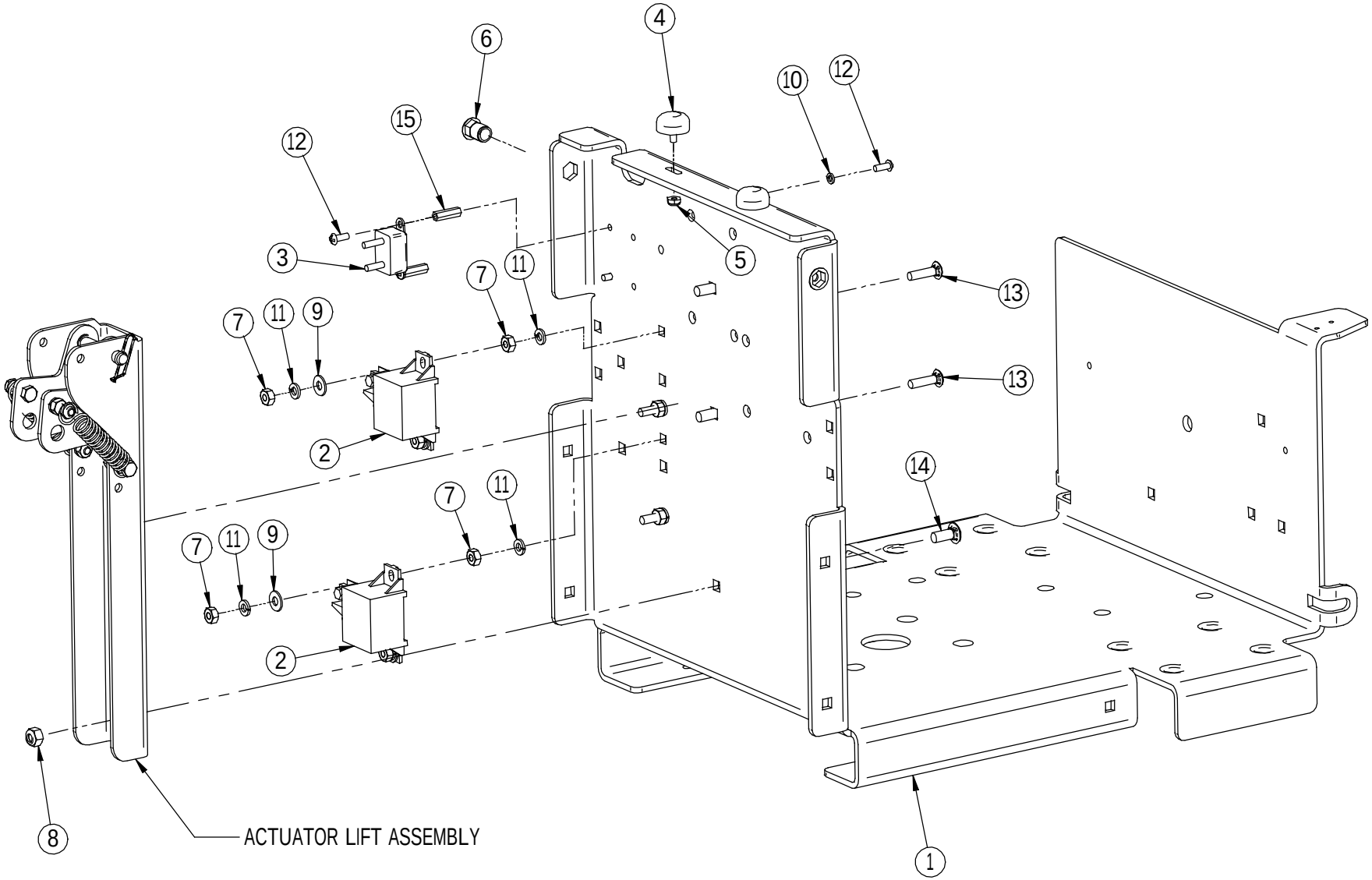

2023 FRAME FRONT

Item	Part Number	Part Description	Qty
1	190-1000	MAINFRAME	1
2	190-8283	RELAY, 24V, 50 AMP	2
3	290-2815	CIR. BREAKER - 15A, 24V	1
4	H-01201	GROMMET	2
5	H-0129155	JNYL #10-32, 18-8 S/S	2
6	H-375HCN	HCN 3/8"- 16	2
7	H-70710	HN 1/4"- 20 SS	8
8	H-70861	NYLOK 5/16" - 18 SS	3
9	H-71013	FNW 1/4" X 5/8" SS	4
10	H-71059	LW #10, SS	2
11	H-71063	LW 1/4" SS	8
12	H-72563	RPH #10-32 X 1/2" SS	4
13	H-74420	CB 1/4"- 20 X 1.0" SS	4
14	H-74429	CB 5/16"- 18 X 3/4" SS	3
15	H-90308	10-32 X 7/8" STANDOFF	2

2023 FRAME MIDDLE

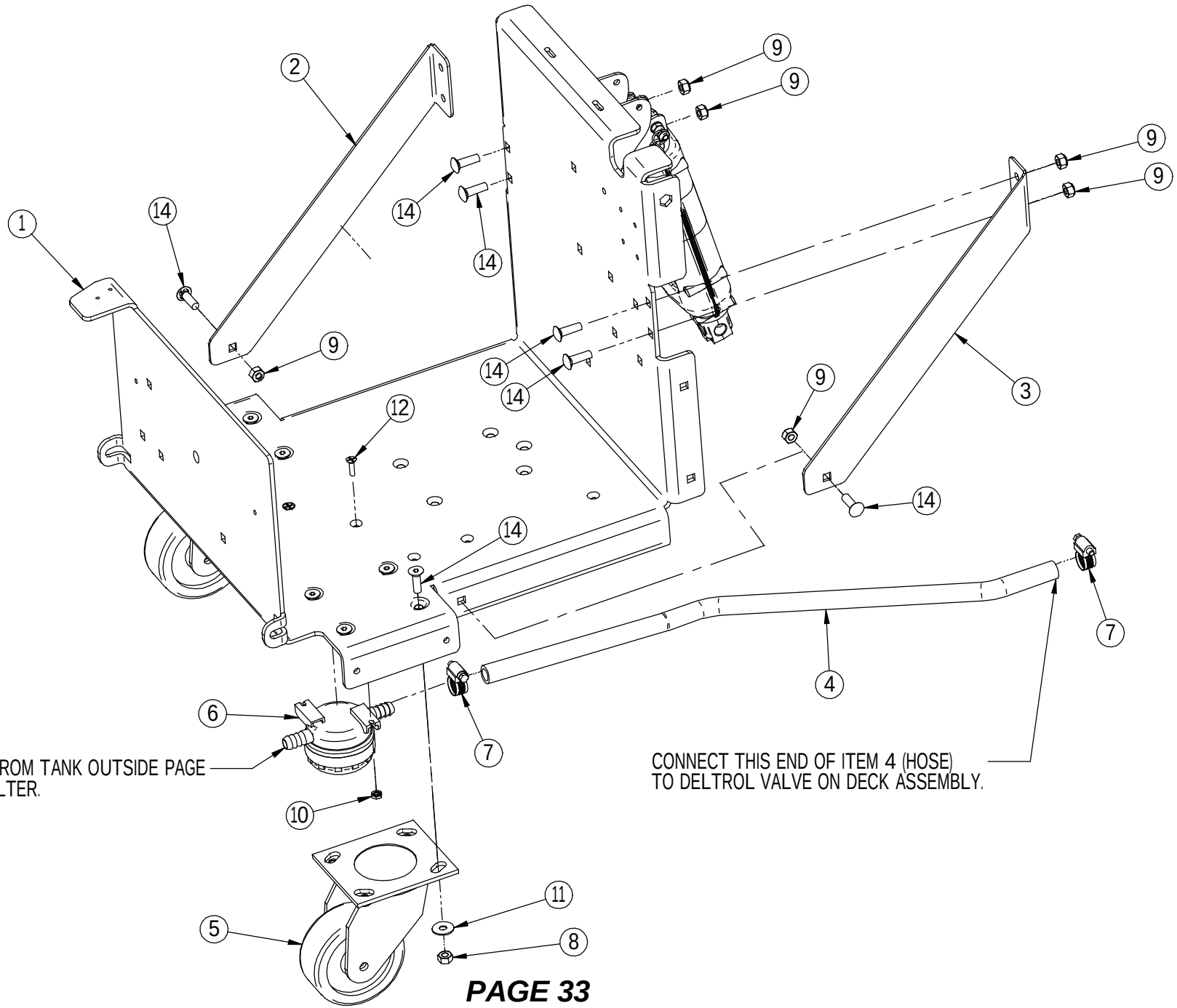

2023 FRAME MIDDLE

Item	Part Number	Part Description	Qty
1	190-1000	MAINFRAME	1
2	190-1005	FRAME SUPPORT - LH	1
3	190-1006	FRAME SUPPORT - RH	1
4	190-1271	CLEAR TUBE, WIRE REINF. 1/2" ID X 27" LG	1
5	190-3035	CASTER, NON-MARKING (RED)	2
6	5-913	INLINE FILTER	1
7	H-62005	HOSE CLAMP 5/8"- 1-1/2" SS	2
8	H-70711	HN 5/16"- 18 SS	4
9	H-70861	NYLOK 5/16" - 18 SS	6
10	H-70923	KN #10-32 SS	2
11	H-71016	FW 5/16" X 7/8" USS	4
12	H-72684	FHP 10-32 X 3/4" SS	2
13	H-73908	FHSCS 5/16"- 18 X 1-1/4" SS	8
14	H-74430	CB 5/16"- 18 X 1" SS	6

2023 FRAME REAR

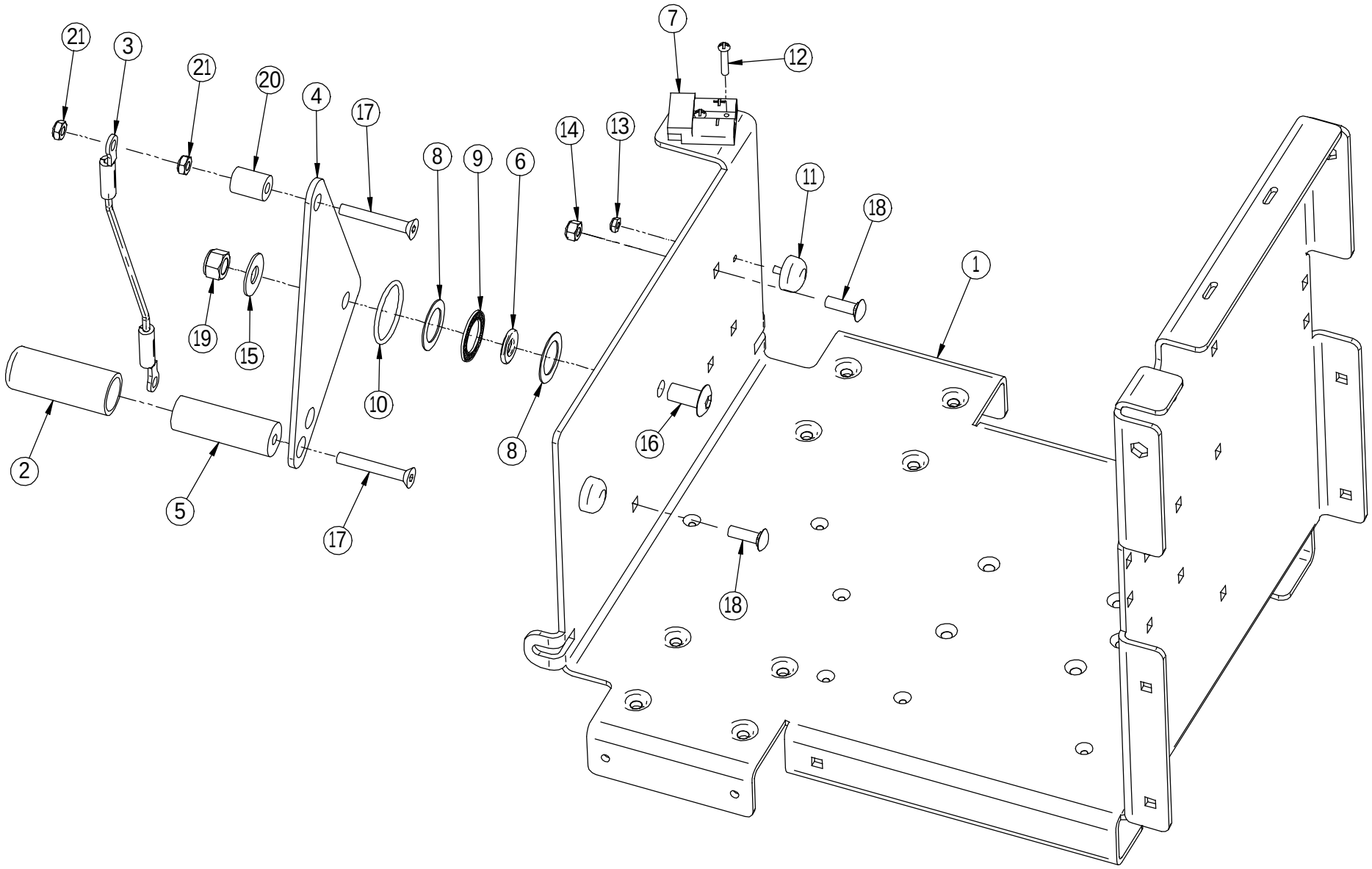

2023 FRAME REAR

Item	Part Number	Part Description	Qty
1	190-1000	MAINFRAME	1
2	190-1280	1" ID x 3" LG RUBBER COVER - YELLOW	1
3	190-1350	SQUEEGEE LIFT CABLE	1
4	190-7100	SQUEEGEE PIVOT PLATE	1
5	22-9812	3/8-16 X 1.0" OD X 3.0" LG STANDOFF	1
6	290-1248	FW BRONZE .500 ID X 1.00 OD X .125 THK	1
7	4-257	CONNECTOR, RED 50	1
8	8-713	1 1/2" THRUST WASHER	2
9	8-714	THRUST BEARING	1
10	8-715	O-RING	1
11	H-01201	GROMMET	2
12	H-28902	RPH #8-32 X 1"	2
13	H-70858	NYLOK #10-32 SS	2
14	H-70861	NYLOK 5/16" - 18 SS	1
15	H-71021	FNW 1/2 ID X 1-1/4 OD	1
16	H-71889	BHSCS 1/2- 13 X 1" SS	1
17	H-73913	FHSCS 5/16"- 18 X 2-1/4" S/S	2
18	H-74430	CB 5/16"- 18 X 1" SS	2
19	H-77864	NYLOK 1/2"-13 SS	1
20	H-92510	SPACER, .312 ID X .75 OD X 1.0" ALUMINUM	1
21	H-NJ05C	JNYL 5/16"- 18 SS	2

SCRUB DECK WHEEL ASS'Y

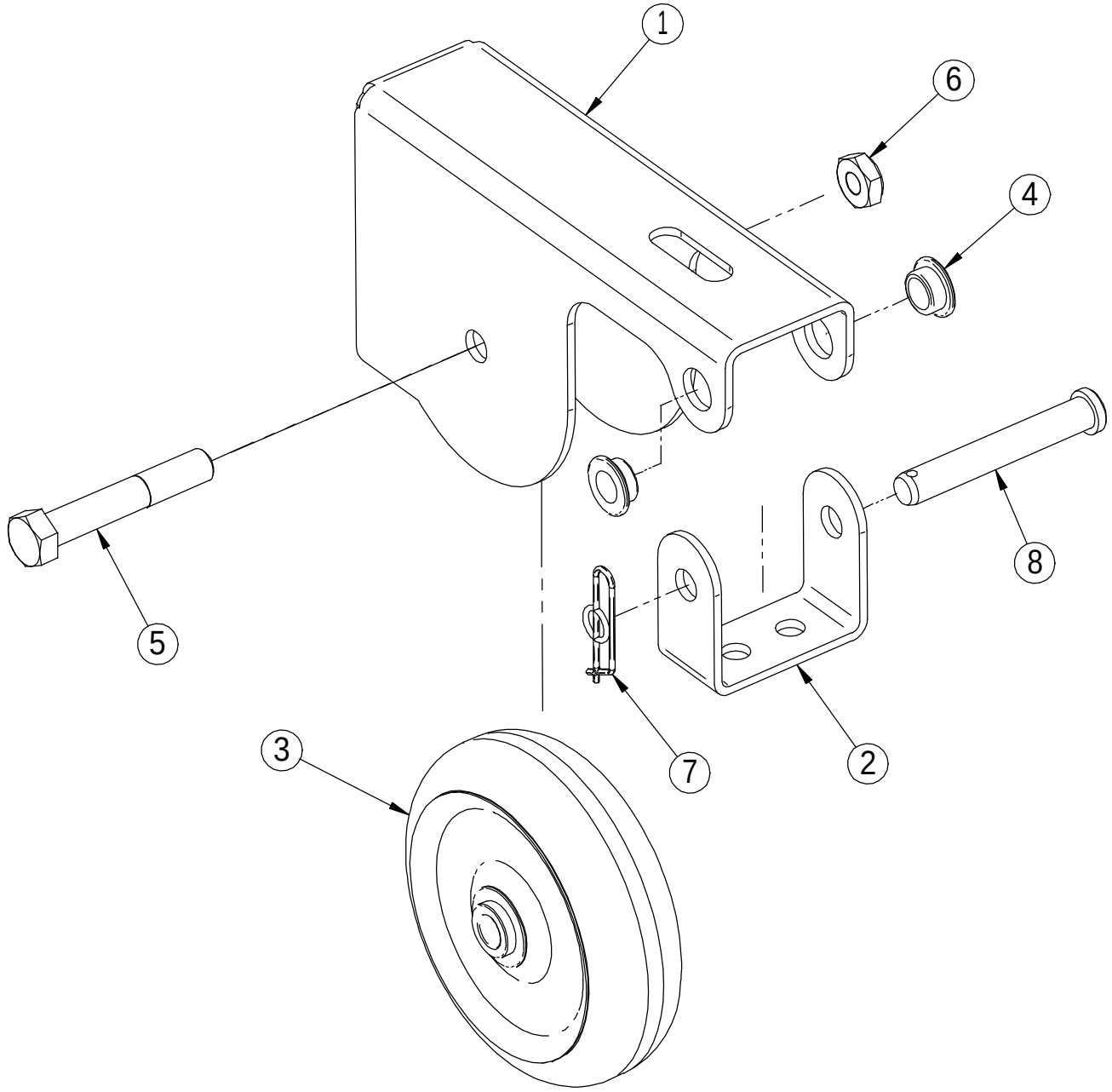

SCRUB DECK WHEEL ASS'Y

Item	Part Number	Part Description	Qty
1	190-1030	DECK WHEEL PIVOT BRACKET	1
2	190-1035	DECK WHEEL PIVOT SUPPORT	1
3	190-3020	4.0" WHEEL (RED)	1
4	290-1233	3/8" ID, 1/2" OD, 1/4" LG BEARING	2
5	H-70112	HCS 3/8"- 16 X 2-1/4" SS	1
6	H-NJ06C	JNYL 3/8- 16 SS	1
7	H-RUE14	3/8" RUE RING COTTER	1
8	H-ZCP170	CLEVIS PIN 3/8" x 2.50"	1

20" DISK DECK ASSEMBLY

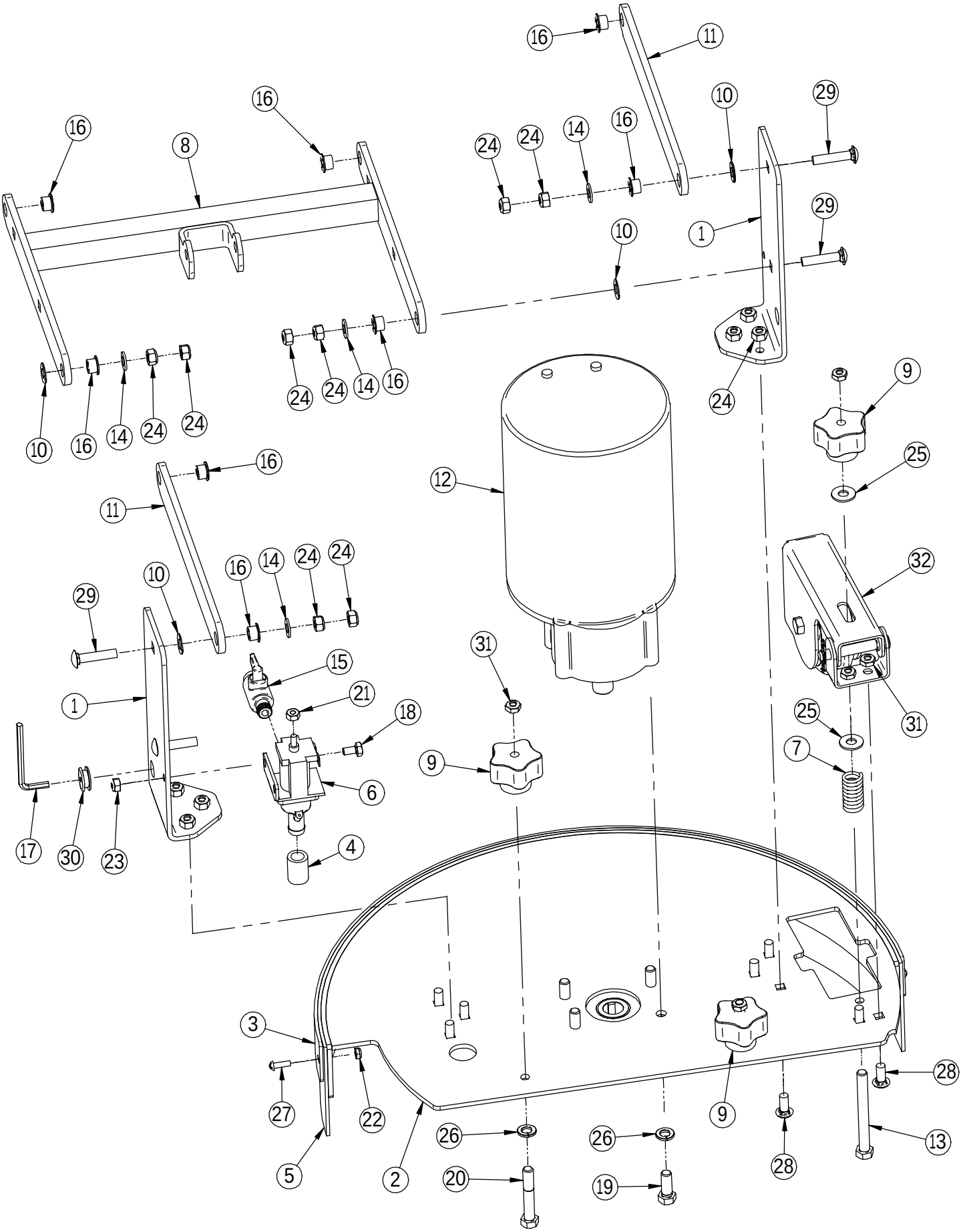

20" DISK DECK ASSEMBLY

Item	Part Number	Keywords	Qty
1	190-1115	20" LIFT BRACKET	2
2	190-1120	20" DISK DECK	1
3	190-1142	20" DECK CURTAIN BAND	1
4	190-1145	CLEAR TUBE, 1/2" ID X 1.0" OD X 1.0" LG	1
5	190-1166	20" DECK CURTAIN, REAR	1
6	190-4500	ADJUSTABLE SOLUTION FLOW VALVE, WITH 1/4" NPTF	1
7	190-7240	SPRING 2.0" LG	1
8	190-9586	LATERAL ARM	1
9	21-7205	STAR KNOB	3
10	290-1247	FW BRONZE .75 OD X .375 ID X .0625 THK	4
11	5-124	LATERAL ARM	2
12	7-222	3/4 HP X 200 RPM MOTOR	1
13	H-10055	HCS 3/8"- 24 X 3.5" SS	1
14	H-33080	FW 5/16" SAE	4
15	H-4796	BALL VALVE, 1/4"	1
16	H-5012	5/16" ID, 1/2" OD, 3/8" LG, FLANGE BEARING	8
17	H-53425	HEX L-KEY, 3/16, NICKEL PLATED	1
18	H-70001	HCS 1/4"-20 X 1/2 SS"	1
19	H-70105	HCS 3/8"- 16 X 1" SS	4
20	H-70136	HCS 3/8"- 24 X 2 1/4" SS	2
21	H-70710	HN 1/4"- 20 SS	1
22	H-70858	NYLOK #10-32 SS	6
23	H-70860	NYLOK 1/4"- 20 SS	1
24	H-70861	NYLOK 5/16" - 18 SS	14
25	H-71017	FW 3/8" X 7/8" SS	2
26	H-71067	LW 3/8" SS	6
27	H-71614	RPH #10-32 X 5/8" SS	6
28	H-74429	CB 5/16"- 18 X 3/4" SS	8
29	H-74432	CB 5/16"- 18 X 1-1/2" SS	4
30	H-9307	GROMMET	1
31	H-NJ05C	JNYL 5/16"- 18 SS	5
32	N/A	SCRUB DECK WHEEL ASSEMBLY	1

20" SHROUD ASSEMBLY

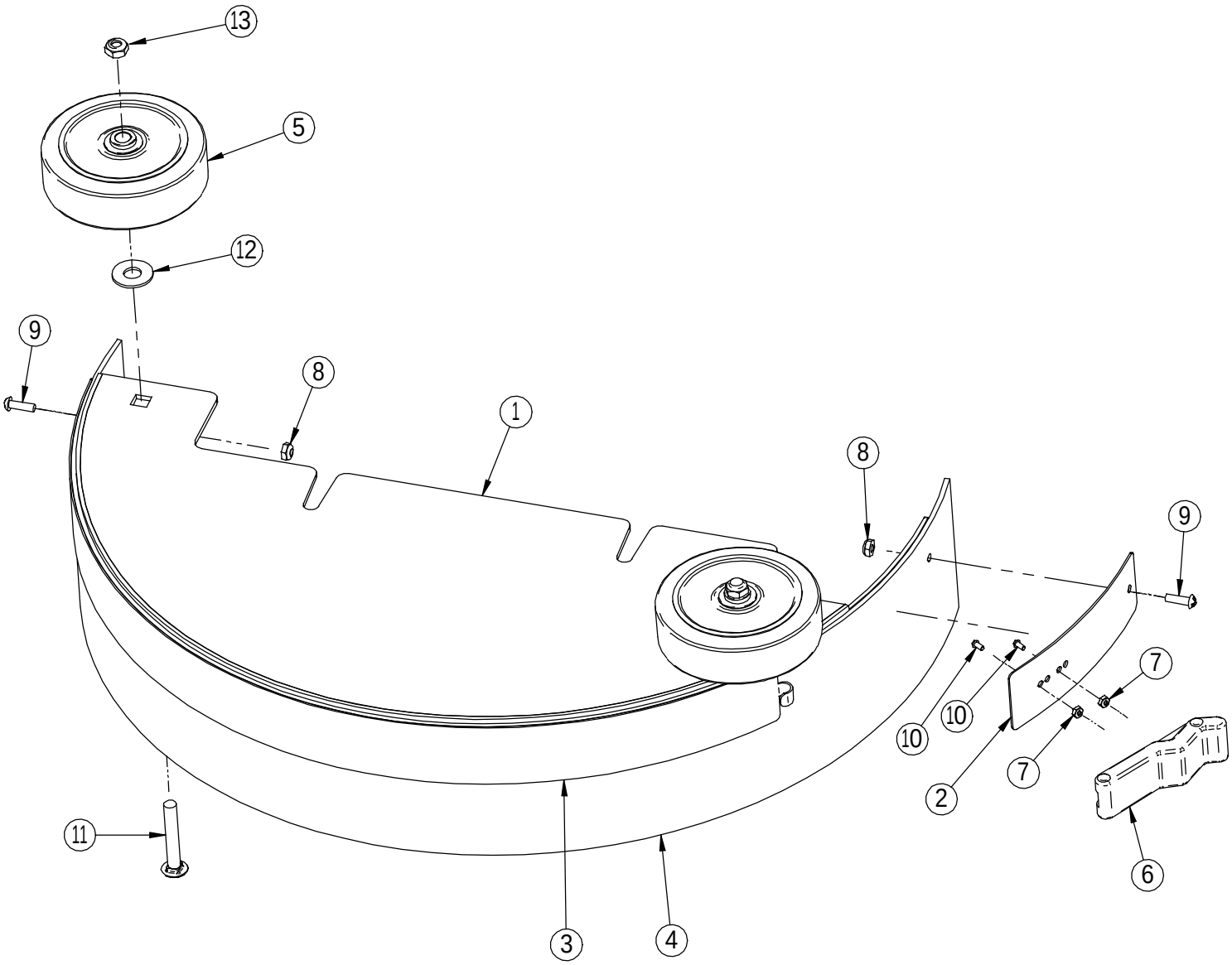

20" SHROUD ASSEMBLY

Item	Part Number	Part Description	Qty
1	190-1101	20" FRONT SHROUD	1
2	190-1140	20" & 23" SHROUD CURTAIN BAND	1
3	190-1141	20" SHROUD CURTAIN BAND	1
4	190-1165	20" SHROUD CURTAIN, FRONT	1
5	190-3030	4.0" WHEEL (GRAY)	2
6	4-124	LATCH	1
7	H-70854	NYLOK #4-40 SS	2
8	H-70858	NYLOK #10-32 SS	2
9	H-71614	RPH #10-32 X 5/8" SS	2
10	H-72478	RPH #4-40 X 1/4"	2
11	H-74433	CB 5/16"- 18 X 2" SS	2
12	H-99001	FW 3/8" SS	2
13	H-NJ05C	JNYL 5/16"- 18 SS	2

23" DISK DECK ASSEMBLY

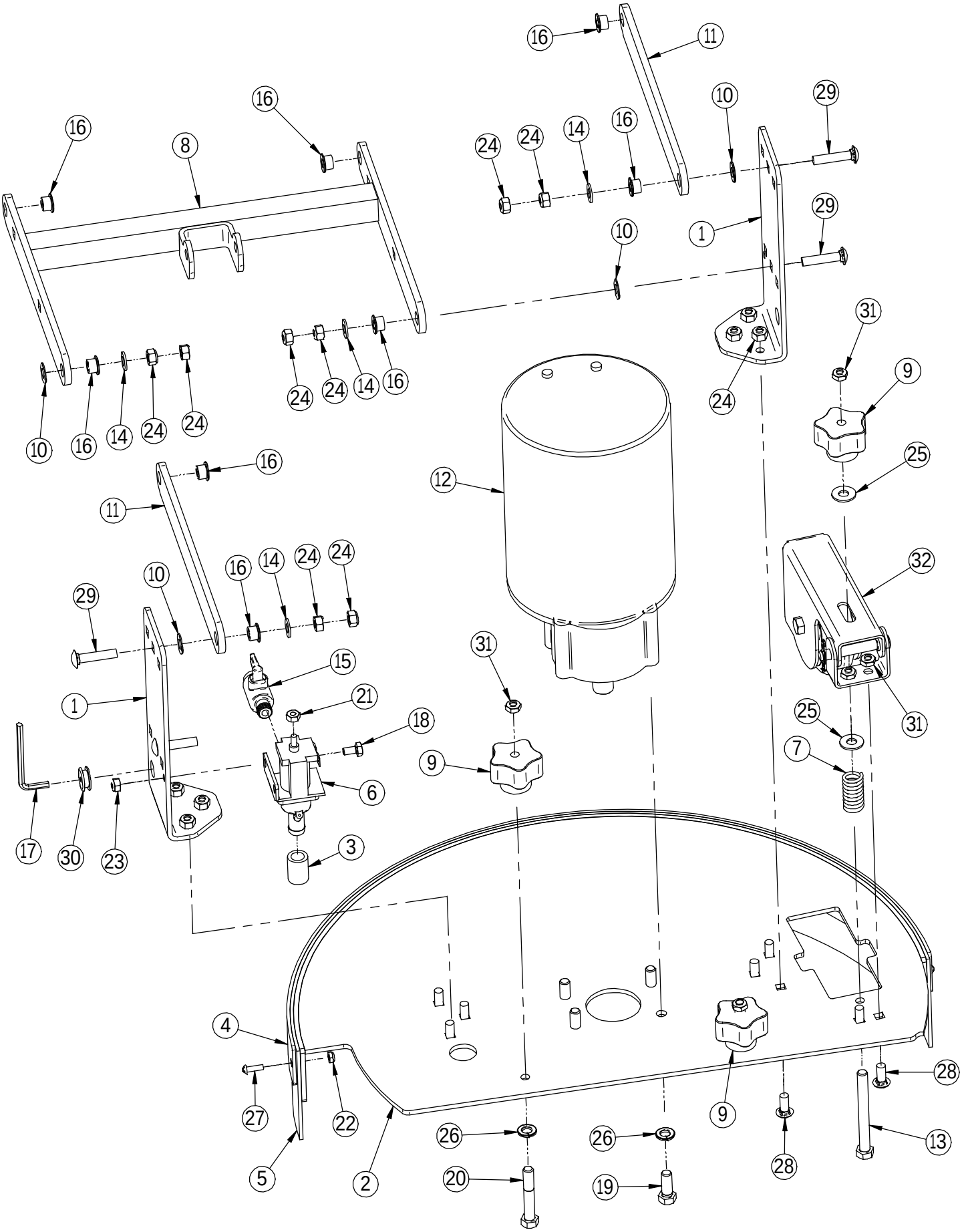

23" DISK DECK ASSEMBLY

Item	Part Number	Keywords	Qty
1	190-1110	23" LIFT BRACKET	2
2	190-1125	23.0" DISK DECK	1
3	190-1145	CLEAR TUBE, 1/2" ID X 1.0" OD X 1.0" LG	1
4	190-1152	23" CURTAIN BAND	1
5	190-1176	23" DECK CURTAIN, REAR	1
6	190-4500	ADJUSTABLE SOLUTION FLOW VALVE, WITH 1/4" NPTF	1
7	190-7240	SPRING 2.0" LG	1
8	190-9586	LATERAL ARM	1
9	21-7205	STAR KNOB	3
10	290-1247	FW BRONZE .75 OD X .375 ID X .0625 THK	4
11	5-124	LATERAL ARM	2
12	7-222	3/4 HP X 200 RPM MOTOR	1
13	H-10055	HCS 3/8"- 24 X 3.5" SS	1
14	H-33080	FW 5/16" SAE	4
15	H-4796	BALL VALVE, 1/4"	1
16	H-5012	5/16" ID, 1/2" OD, 3/8" LG, FLANGE BEARING	8
17	H-53425	HEX L-KEY, 3/16, NICKEL PLATED	1
18	H-70001	HCS 1/4"-20 X 1/2 SS"	1
19	H-70105	HCS 3/8"- 16 X 1" SS	4
20	H-70136	HCS 3/8"- 24 X 2 1/4" SS	2
21	H-70710	HN 1/4"- 20 SS	1
22	H-70858	NYLOK #10-32 SS	7
23	H-70860	NYLOK 1/4"- 20 SS	1
24	H-70861	NYLOK 5/16" - 18 SS	14
25	H-71017	FW 3/8" X 7/8" SS	2
26	H-71067	LW 3/8" SS	6
27	H-71614	RPH #10-32 X 5/8" SS	7
28	H-74429	CB 5/16"- 18 X 3/4" SS	8
29	H-74432	CB 5/16"- 18 X 1-1/2" SS	4
30	H-9307	GROMMET	1
31	H-NJ05C	JNYL 5/16"- 18 SS	5
32	N/A	SCRUB DECK WHEEL ASSEMBLY	1

23" SHROUD ASSEMBLY

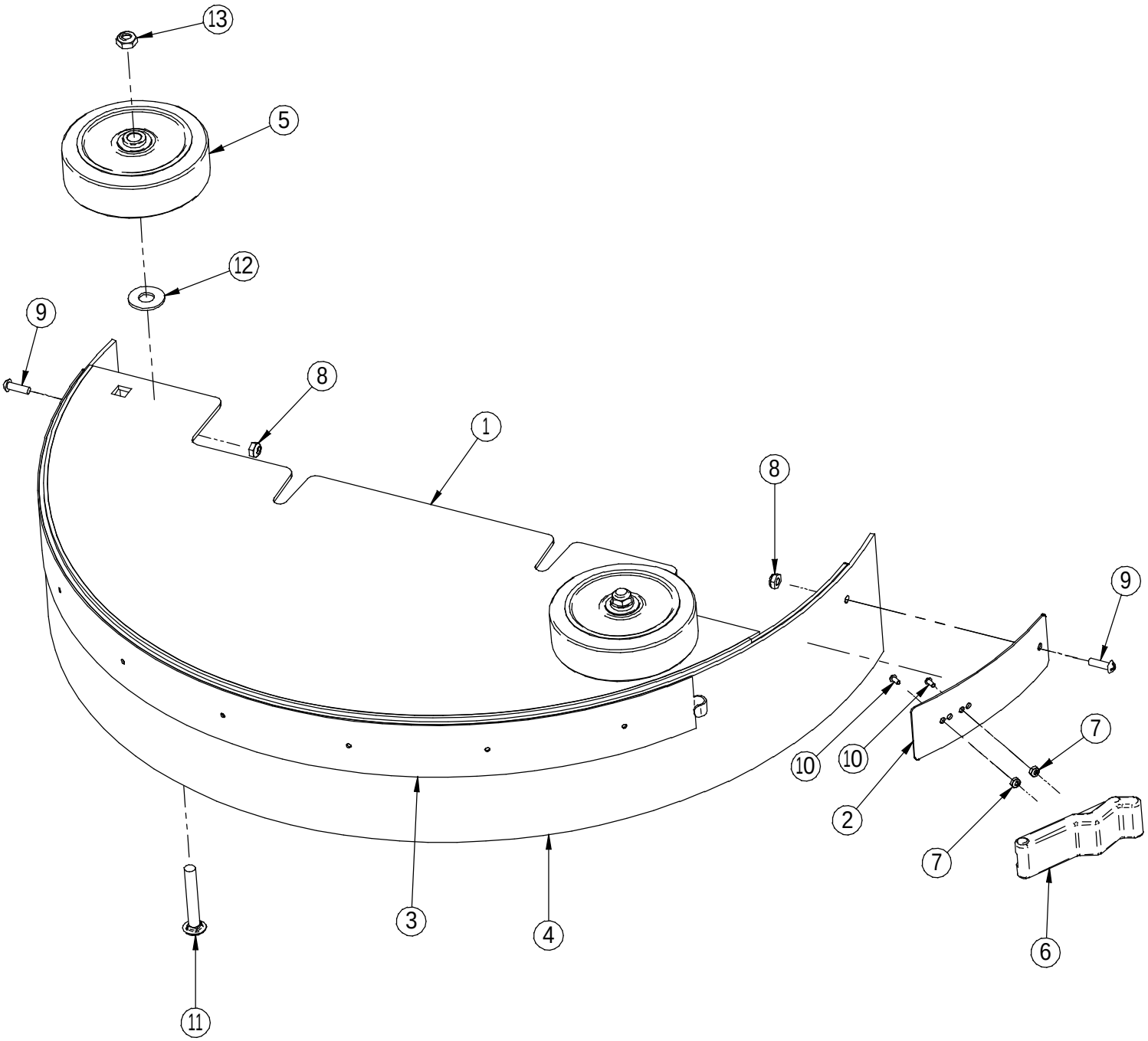

23" SHROUD ASSEMBLY

Item	Part Number	Part Description	Qty
1	190-1105	23" FRONT SHROUD	1
2	190-1140	20" & 23" SHROUD CURTAIN BAND	1
3	190-1151	23" CURTAIN BAND	1
4	190-1175	SHROUD CURTAIN, FRONT	1
5	190-3030	4.0" WHEEL (GRAY)	2
6	4-124	LATCH	1
7	H-70854	NYLOK #4-40 SS	2
8	H-70858	NYLOK #10-32 SS	2
9	H-71614	RPH #10-32 X 5/8" SS	2
10	H-72478	RPH #4-40 X 1/4"	2
11	H-74433	CB 5/16"- 18 X 2" SS	2
12	H-99001	FW 3/8" SS	2
13	H-NJ05C	JNYL 5/16"- 18 SS	2

DISK DECK BRUSH ASSEMBLY

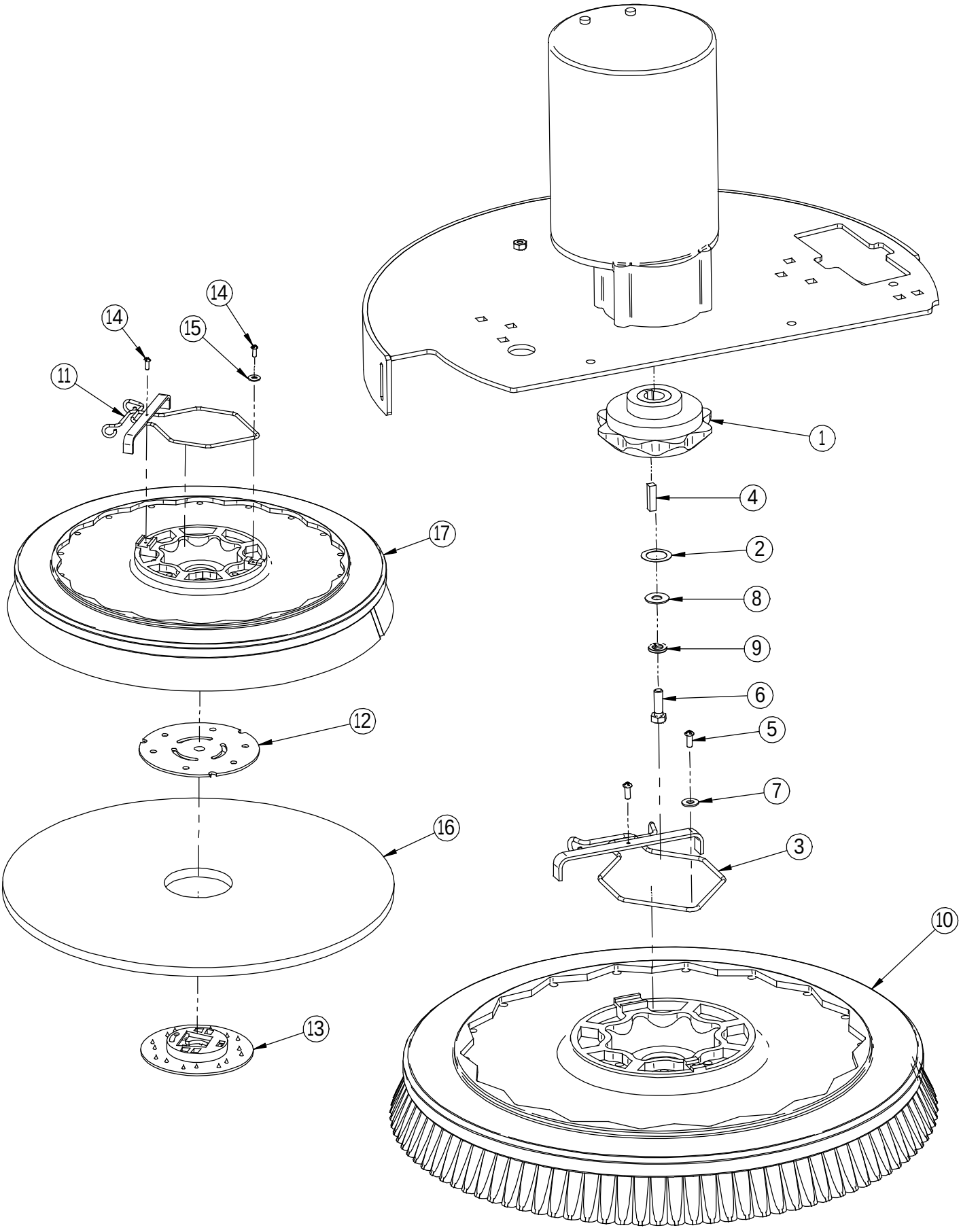

DISK DECK BRUSH ASSEMBLY

Item	Part Number	Part Description	Qty
1	21-5000	BRUSH DRIVER	1
2	32-3044	FW .75 ID X 1.13 OD X .01	1
3	40-423	BRUSH REPAIR KIT	1
4	5-431A	1/4" X 1" KEY	1
5	H-29048	RPH #10-32 X 1/2"	2
6	H-70055	HCS 5/16"- 18 X 1" SS	1
7	H-71013	FW 1/4" X 5/8" SS	1
8	H-71017	FW 3/8" X 7/8" SS	1
9	H-71067	LW 3/8" SS	1
10	SEE COMMON WEAR PARTS	DISK BRUSH	1
11	40-423	BRUSH REPAIR KIT	1
12	40-433	DRIVER LOCK	1
13	40-433	DRIVER LOCK	1
14	H-29048	RPH #10-32 X 1/2"	2
15	H-71013	FW 1/4" X 5/8" SS	1
16	SEE COMMON WEAR PARTS	BURNISHER PAD	1
17	SEE COMMON WEAR PARTS	PAD DRIVER	1

VAC MOTOR ASSEMBLY

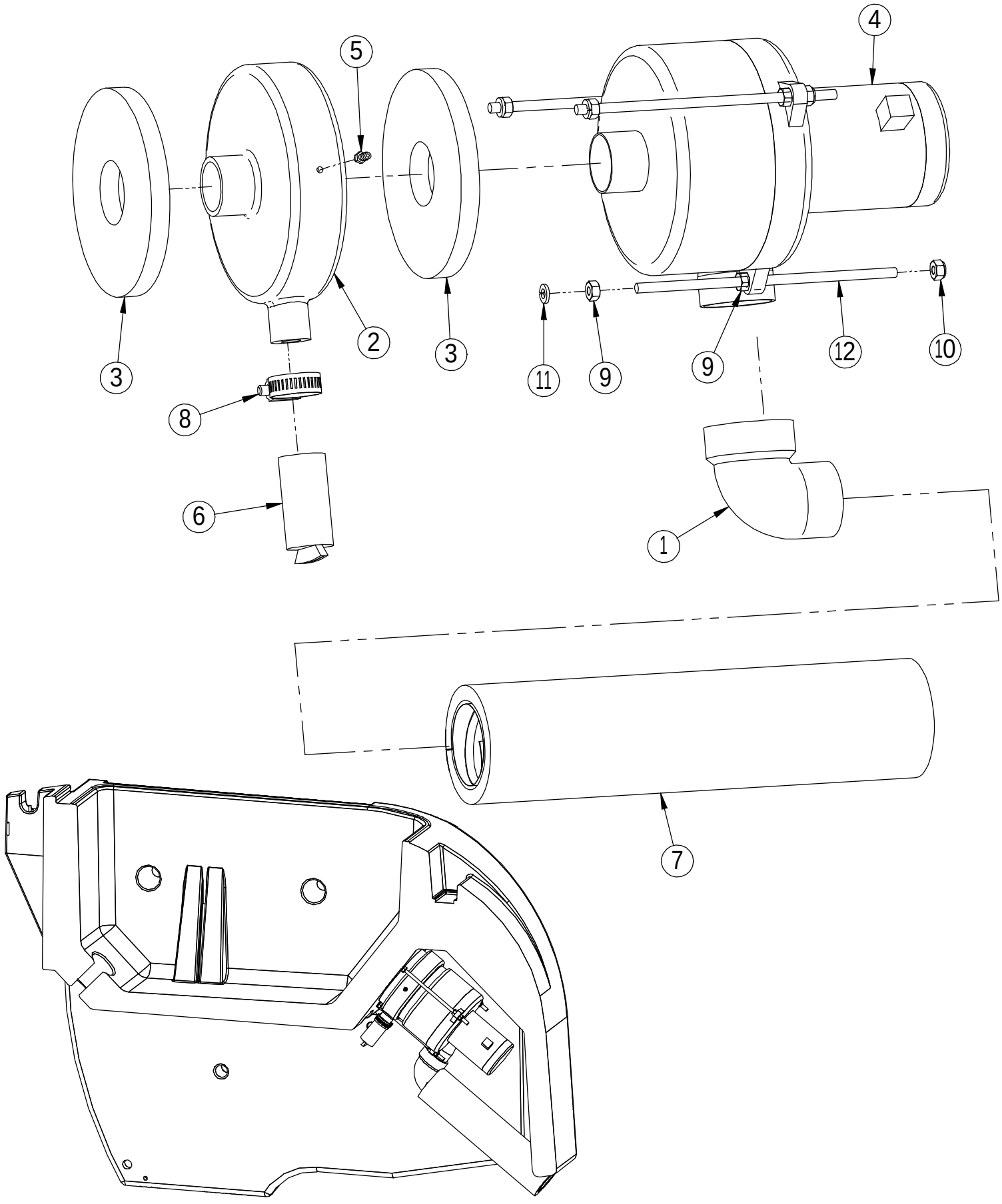

VAC MOTOR ASSEMBLY

Item	Part Number	Part Description	Qty
1	190-1225	1.50 X 90 DEG STREET ELBOW	1
2	190-1450	VAC BOX	1
3	190-3002	VAC MOTOR GASKET	2
4	290-250	VAC MOTOR, 3 HP, TANGENTAL	1
5	390-2328A	VACUUM SWITCH BARB	1
6	390-3010	LOADER VALVE	1
7	430-2502	VACUUM FAN MUFFLER	1
8	H-62005	CLAMP 5/8"- 1-1/2" SS	1
9	H-70710	HN 1/4"- 20 SS	6
10	H-70860	NYLOK 1/4"- 20 SS	3
11	H-71063	LW 1/4" SS	3
12	H-W1579194	1/4-20 X 7" FT STUD S/S	3

2023 TANK INSIDE

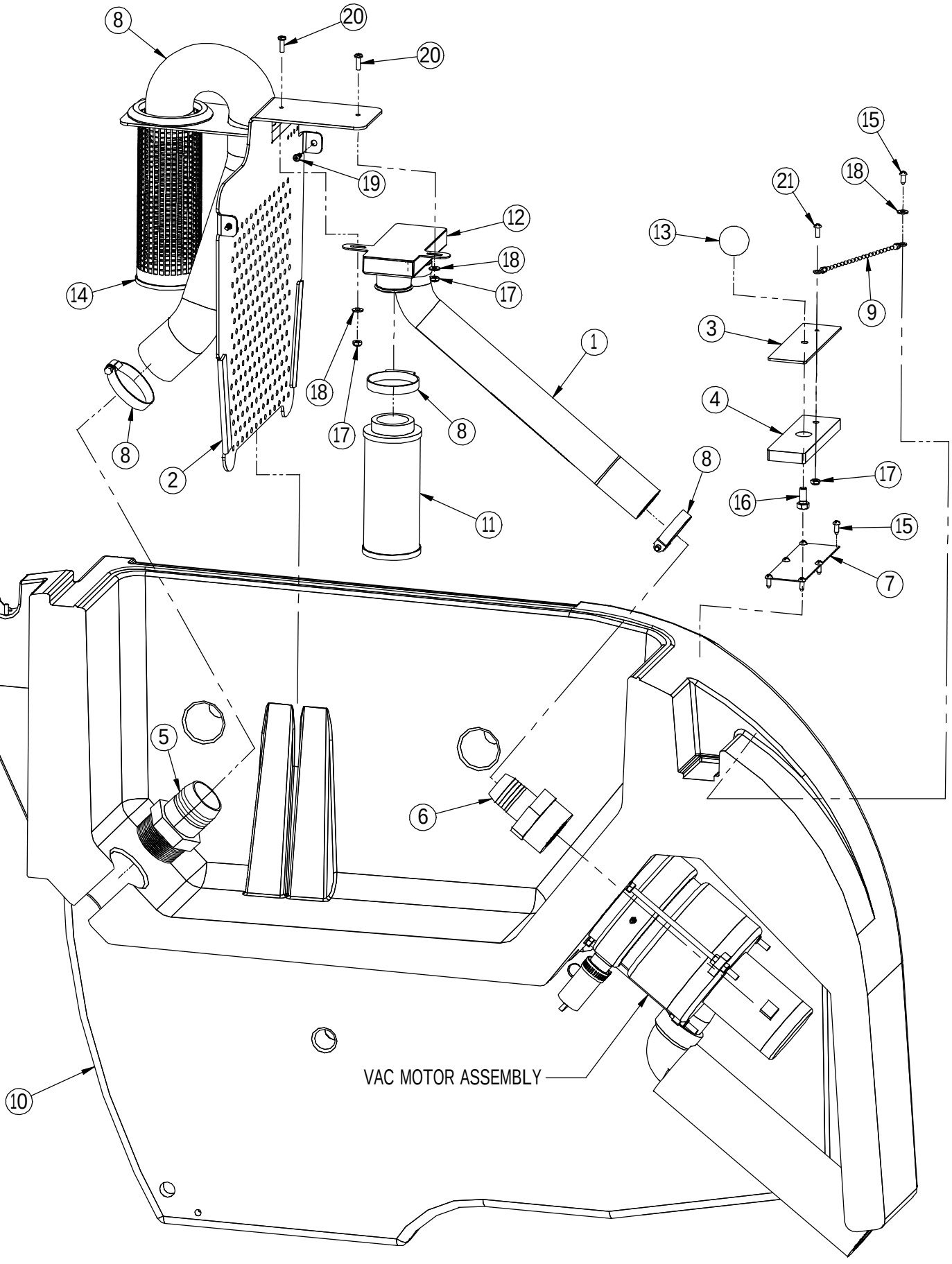

2023 TANK INSIDE

Item	Part Number	Part Description	Qty
1	190-1025	1-1/2" ID X 18" LG WIRE REINF BLACK HOSE	1
2	190-1130	BAFFLE	1
3	190-1180	SOLUTION FILL LID	1
4	190-1190	SOLUTION FILL LID GASKET	1
5	190-1210	2.0" MNPT X 2.0" BARB, NYLON	1
6	190-1215	2.0" MNPT X 1.50" BARB, NYLON	1
7	190-1220	SCREEN	1
8	190-1272	2.0" ID X 24.0" LG WIRE REINF HOSE (GRAY)	1
9	190-4060	6" S/S CHAIN LANYARD	1
10	190-4140	SOLUTION / RECOVERY TANK	1
11	21-4085	VAC SCREEN	1
12	21-7060	BOX ASM	1
13	21-7101	LIFT KNOB	1
14	250-8911	SCREEN STRAINER	1
15	H-28878	RPH #8-32 X 1/2" SMS	7
16	H-70053	HCS 5/16"- 18 X 3/4" SS	1
17	H-70858	NYLOK #10-32 SS	3
18	H-71009	FW #10 SS	3
19	H-71889	SMS #14 x 1/2" S/S	2
20	H-72517	PPH #10-32 X 5/8" SS	2
21	H-72563	RPH #10-32 X 1/2" SS	1

2023 TANK OUTSIDE

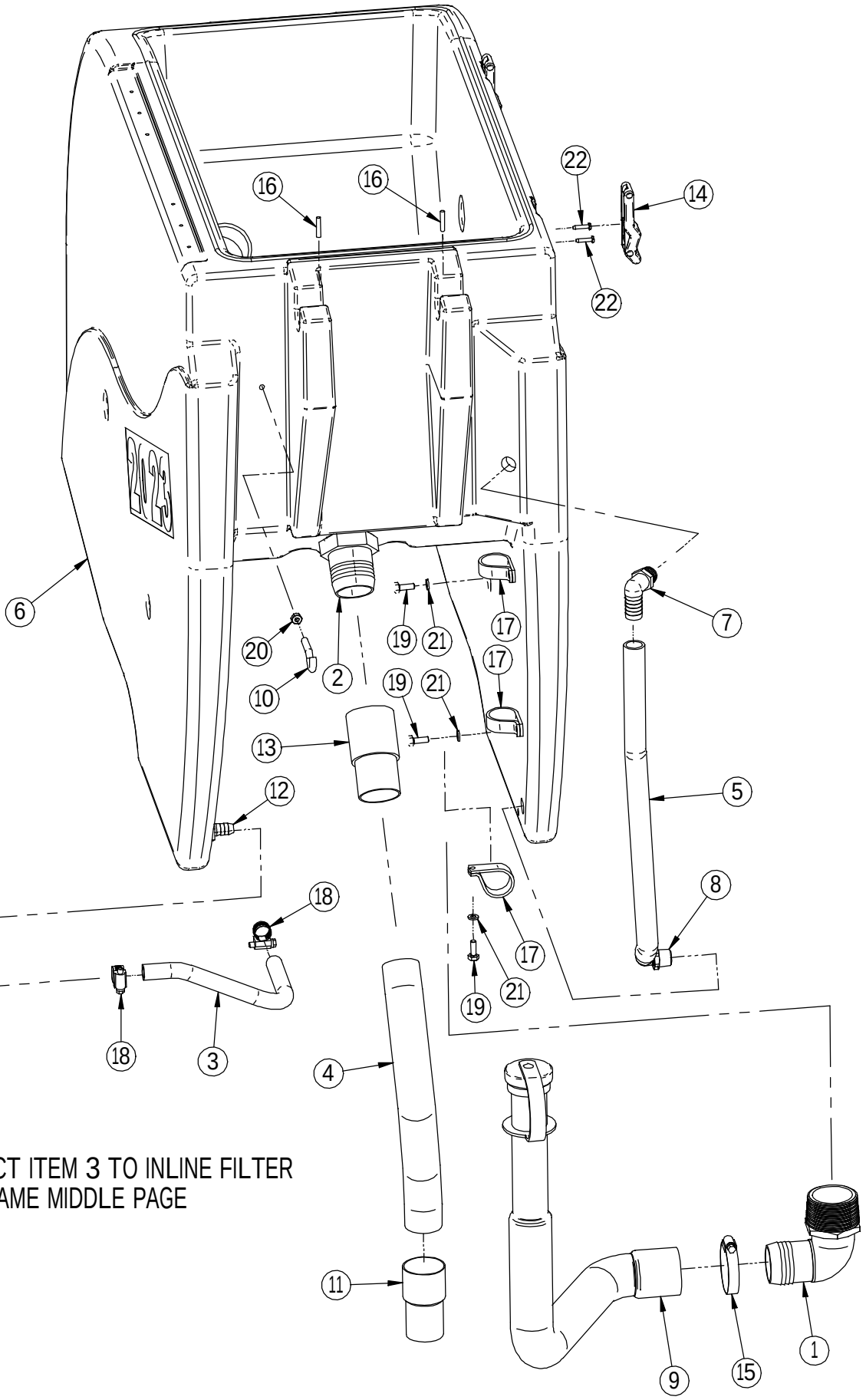

NOTE: CONNECT ITEM 3 TO INLINE FILTER
SEE FRAME MIDDLE PAGE

2023 TANK OUTSIDE

Item	Part Number	Part Description	Qty
1	190-1205	ELBOW, 90 DEG, 2.0" MALE NPT X 2.0" BARB	1
2	190-1210	2.0" MNPT X 2.0" BARB, NYLON	1
3	190-1270	1/2" ID X 11" LG WIRE REINF. CLEAR HOSE	1
4	190-1300	1-1/2" ID X 31" LG WIRE REINF BLACK HOSE	1
5	190-1370	CLEAR HOSE, 3/4" ID X 1.0" OD X 21" LG	1
6	190-4140	SOLUTION / RECOVERY TANK	1
7	190-5463	ELBOW, 1/2" MALE NPT X 3/4" BARB	1
8	190-5779	ELBOW, MALE 1/2" NPT X 1/2" TUBE OD, GLASS FILLED NYLON	1
9	190-7210	1-1/2" ID X 32" LG DRAIN HOSE	1
10	190-9491	1/4-20 J-HOOK	1
11	21-4072	HOSE CUFF, 1 1/2"	1
12	21-4146	1/2" Male NPT X 1/2" BARB, BRASS	1
13	290-7212	1-1/2" - 2" HOSE CUFF	1
14	4-124	LATCH	2
15	5-719	CLAMP 1 9/16 - 2 1/2 " SS	1
16	H-26740	PIN, 3/16 DIA X 1.0" LG	2
17	H-3225T5	RUBBER LOOP CLAMP	3
18	H-62005	HOSE CLAMP 5/8"- 1-1/2" SS	2
19	H-70003	HCS 1/4"- 20 X 3/4" SS	3
20	H-70710	HN 1/4"- 20 SS	1
21	H-71063	LW 1/4" SS	3
22	H-72916	PPH SMS #8 X 3/4" SS	4

TANK LID ASSEMBLY

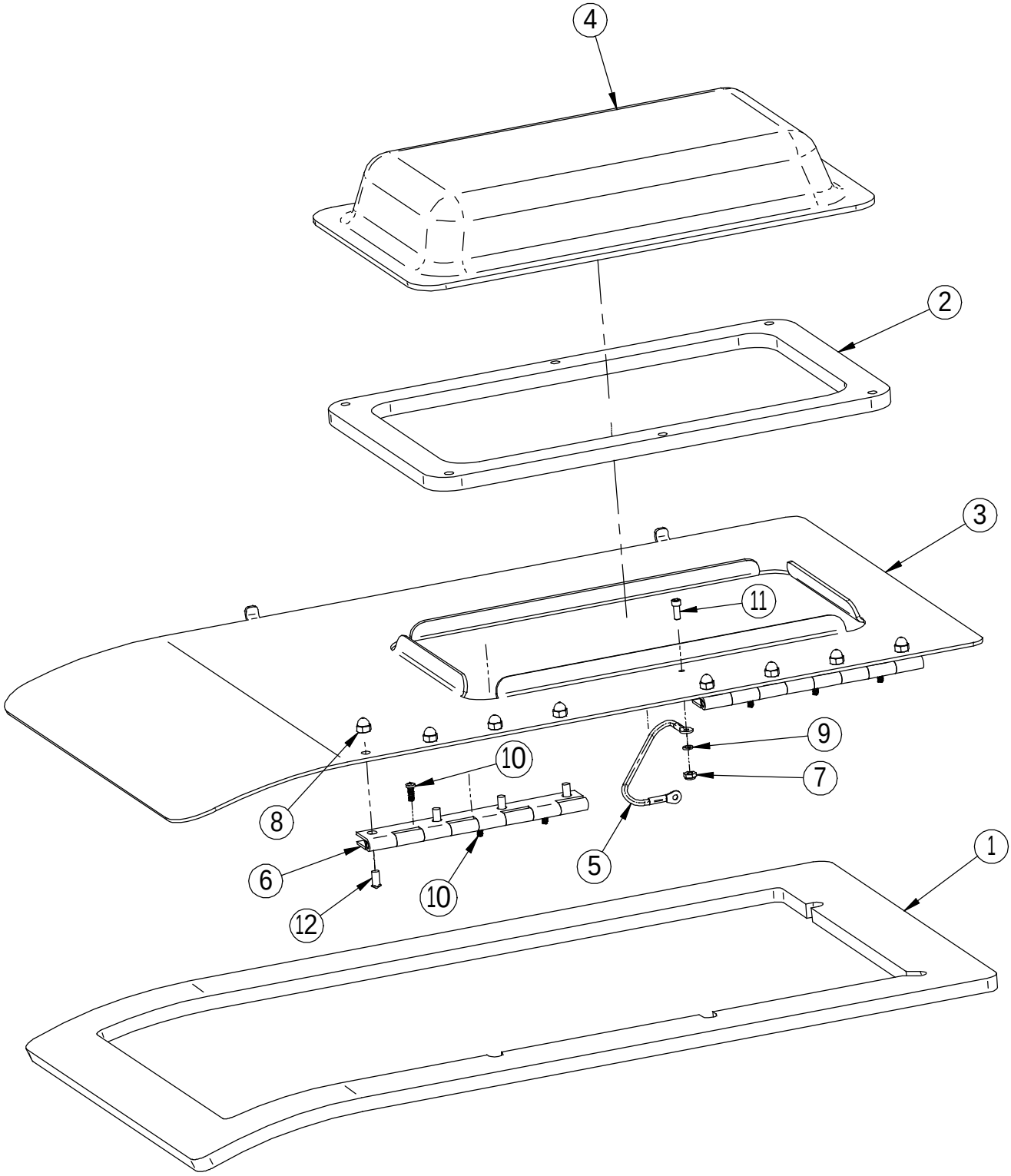

TANK LID ASSEMBLY

Item	Part Number Model 2023	Part Number Model 2017	Part Description	Qty
1	190-1070	170-1070	TANK LID GASKET	1
2	190-1075		TANK CLEAR COVER GASKET	1
3	190-1400	170-1400	TANK LID	1
4	190-1410		VAC FORMED CLEAR COVER	1
5	21-4060		LANYARD	1
6	32-8000		8" CONTINUOUS HINGE	2
7	H-37015		NYLOK #10-32	1
8	H-37708		1/4-20 LC ACORN NUT	8
9	H-71059		LW #10, SS	1
10	H-71889		SMS #14 x 1/2" S/S	6
11	H-73448		SHCS #10-32 X 1/2" S/S	1
12	H-73752		BHSCS 1/4-20 X 1/2"	8

CONTROL PANEL

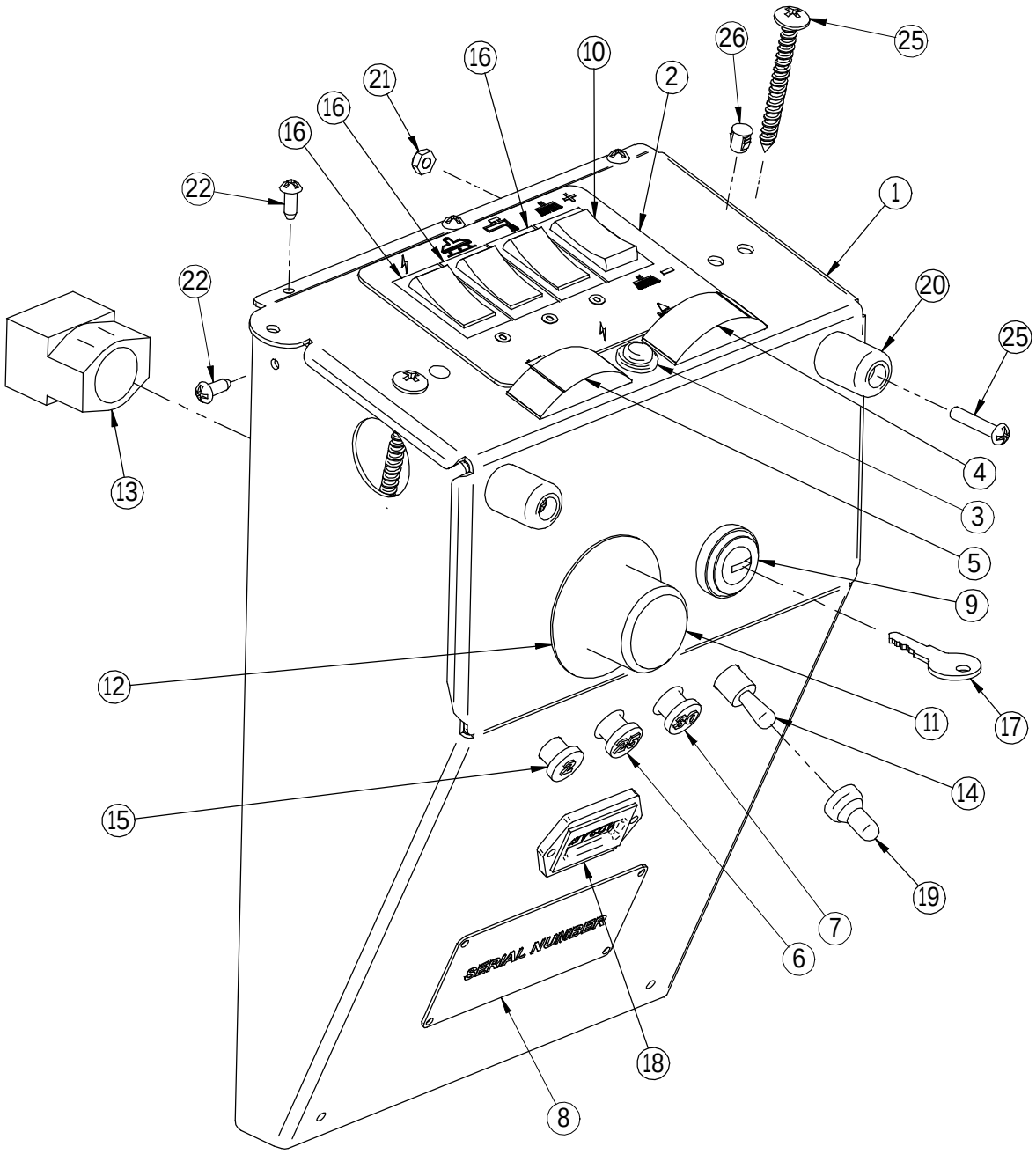

CONTROL PANEL

Item	Part Number	Part Description	Keywords	Qty
1	190-1090	CONTROL PANEL		1
2	190-1501	2023 CONTROL PANEL DECAL		1
3	190-2310	POWER (GREEN)		1
4	190-3851	DOWN PRESSURE GAUGE		1
5	190-5431	BATTERY GAUGE		1
6	190-8370	FUSE RESETTABLE 25 AMP		1
7	290-9609	FUSE, RESETTABLE, 30 AMP		1
8	4-101	SERIAL NUMBER PLATE		1
9	4-234	KEY SWITCH	(OPTIONAL)	1
10	5-233	MOM-OFF-MOM DPDT		1
11	5-300	EMERGENCY SHUT OFF	(OPTIONAL)	1
12	5-301	EMERGENCY LEGEND PLATE	(OPTIONAL)	1
13	5-302	EMERGENCY CONTACT BLACK	(OPTIONAL)	1
14	5-892	TOGGLE, ON-OFF SPST	(OPTIONAL)	1
15	7-837	FUSE RESETTABLE 2 AMP		1
16	8-231	SWITCH, ON-OFF ROCKER SPST		3
17	8-235	KEY SET (REPLACE)	(OPTIONAL)	1
18	8-262	HOUR METER		1
19	H-01199	PROTECTIVE BOOT, TOGGLE SWITCH, (BLUE)	OPTIONAL	1
20	H-01201	GROMMET		2
21	H-0129155	JNYL #10-32, 18-8 S/S		2
22	H-28878	RPH #8-32 X 1/2" SMS		5
23*	H-70888	HOLE PLUG 3/4"		1
24*	H-70889	HOLE PLUG 7/8"		1
25	H-72976	SMS #14 X 2-1/2" S/S		2
26	H-85981	HOLE PLUG, 1/4"		2
27*	H-85985	HOLE PLUG 1/2"		2

* = NOT SHOWN

HANDLE BAR

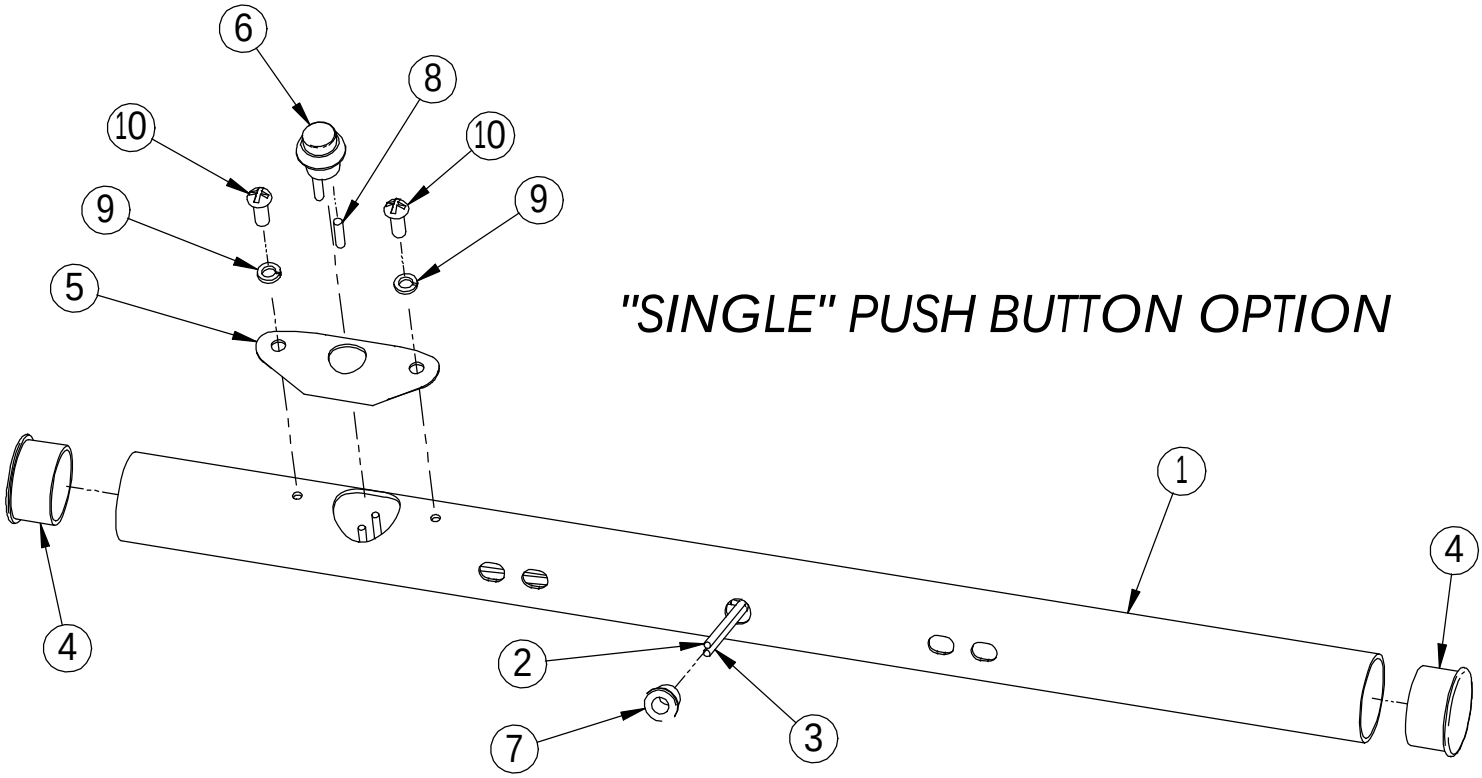

"SINGLE" PUSH BUTTON OPTION

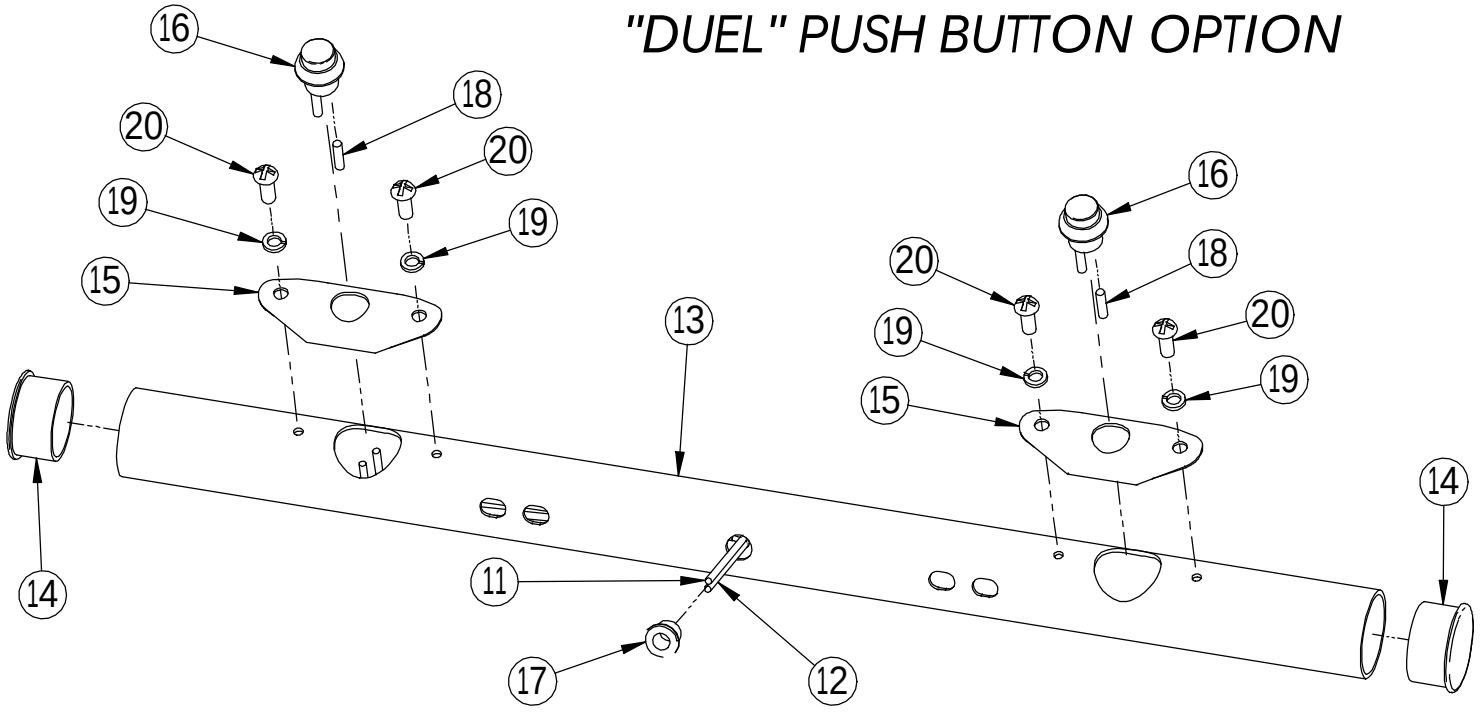

"DUEL" PUSH BUTTON OPTION

HANDLE BAR

"SINGLE" PUSH BUTTON OPTION

Item	Part Number	Part Description	Qty
1	190-1040	HANDLE BAR	1
2	190-1041	RED WIRE, 16 GAGE	1
3	190-1042	YELLOW WIRE, 16 GAGE	1
4	190-1390	END CAP	2
5	7-228	SWITCH MOUNT PLATE	1
6	7-229	PUSH BUTTON SWITCH	1
7	H-03124	1/4" ID, 3/8" OD, 3/8" LG FLANGED BEARING, NYLON	1
8	H-108	HEAT SHRINK	2
9	H-71059	LW #10, SS	2
10	H-72398	PPHMS #8-32 X 1/2" SS	2

"DUEL" PUSH BUTTON OPTION

Item	Part Number	Part Description	Qty
11	190-1041	RED WIRE, 16 GAGE	2
12	190-1042	YELLOW WIRE, 16 GAGE	2
13	190-1045	HANDLE BAR	1
14	190-1390	END CAP	2
15	7-228	SWITCH MOUNT PLATE	2
16	7-229	PUSH BUTTON SWITCH	2
17	H-03124	1/4" ID, 3/8" OD, 3/8" LG FLANGED BEARING, NYLON	1
18	H-108	HEAT SHRINK	4
19	H-71059	LW #10, SS	4
20	H-72398	PPHMS #8-32 X 1/2" SS	4

32 INCH SQUEEGEE ASSEMBLY

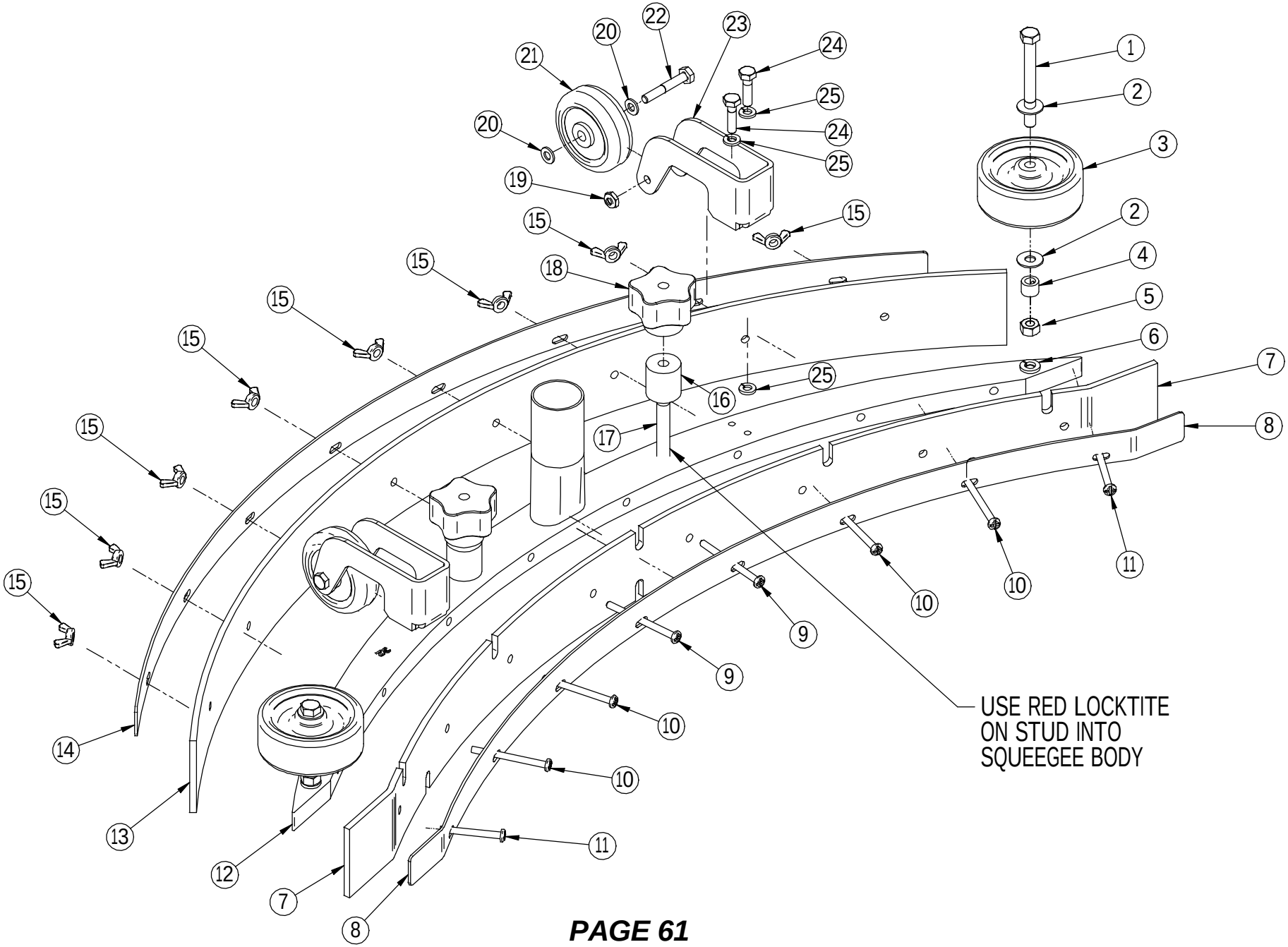

32 INCH SQUEEGEE ASSEMBLY

Item	Part Number	Part Description	Qty
1	H-70065	HCS 5/16"- 18 X 3" SS	2
2	H-71015	FW 5/16" X 3/4" SAE SS	4
3	21-7600	SIDE WHEEL (GREY)	2
4	H-33371	5/16" ID SHAFT COLLAR	2
5	H-70711	HN 5/16"- 18 SS	2
6	H-71065	LW 5/16" SS	2
7	22-755G	FRONT SQUEEGEE BLADE	1
8	23-7170	SQUEEGEE BAND, FRONT	1
9	H-00288	PPH #10-32 X 2 1/2" SS	2
10	H-00249	PPH #10-32 X 2 1/4" SS	4
11	H-72555	PPH #10-32 X 1 3/4" SS	2
12	23-7181	32" SQUEEGEE BODY	1
13	22-754G	REAR SQUEEGEE BLADE	1
14	23-7160	SQUEEGEE BAND, REAR	1
15	H-70908	WINGNUT 10-32 SS	8
16	5-846	PIVOT SHAFT	2
17	H-00568	STUD 3/8"- 16 X 2 1/2" SS	2
18	290-5786	STAR KNOB	2
19	H-NJ04C	JNYL 1/4" - 20 SS	2
20	H-00283	FW 1/4" NYLON	4
21	21-7570	BACK UP WHEEL (GREY)	2
22	H-0172248	HCS 1/4"- 20 X 1.625" SS	2
23	21-7220	SQUEEGEE TRAIL MOUNTS	2
24	H-70005	HCS 1/4"- 20 X 1" SS	4
25	H-71063	LW 1/4" SS	6

FRAME, SUSPENSION & SQUEEGEE

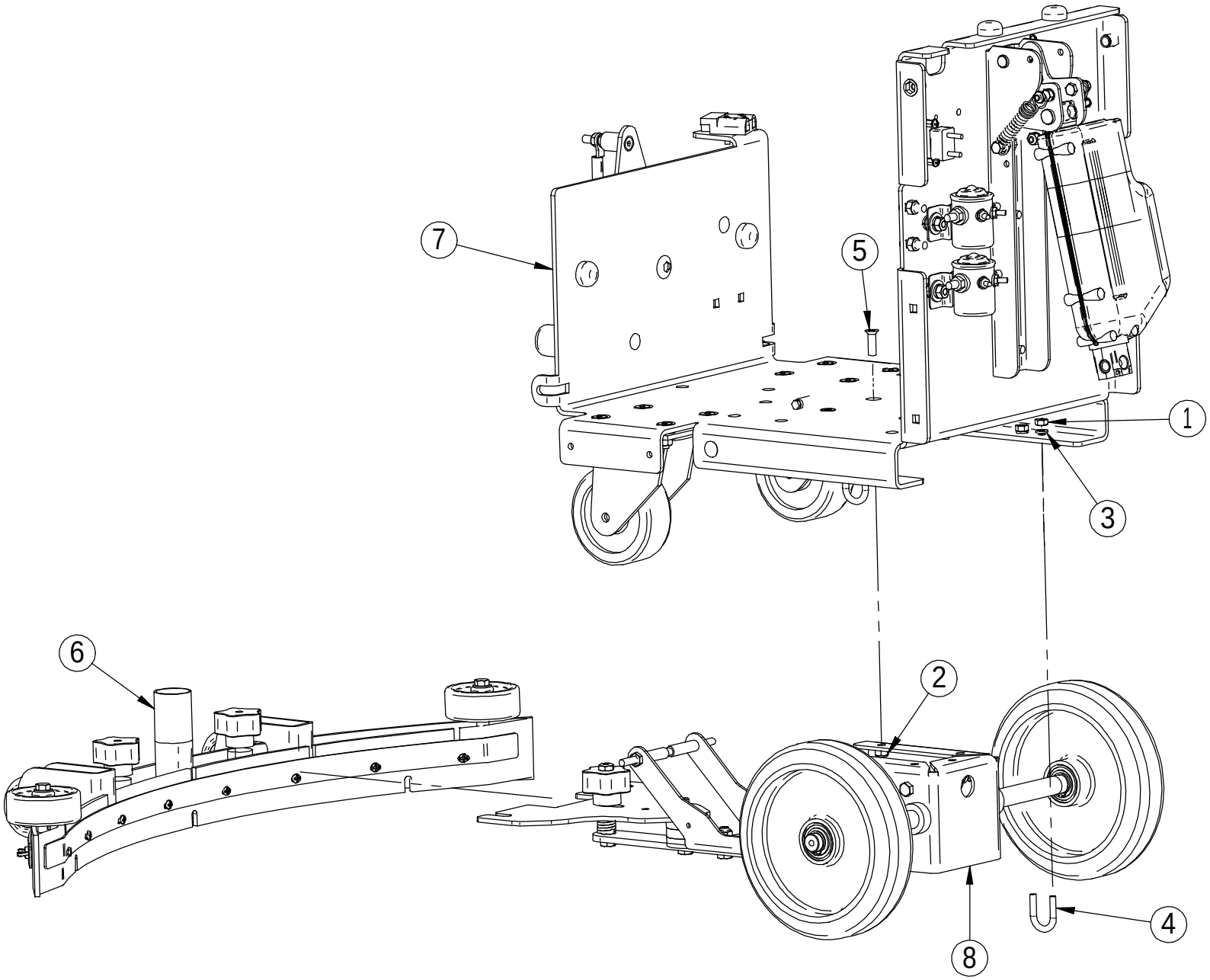

FRAME, SUSPENSION & SQUEEGEE

Item	Part Number	Part Description	Qty
1	H-70710	HN 1/4"- 20 SS	4
2	H-70861	NYLOK 5/16" - 18 SS	5
3	H-71063	LW 1/4" SS	4
4	H-74620	1/4-20 X 3/4" U-BOLT	2
5	H-75661	FPH 5/16"- 18 X 1" SS	5
6	N/A	32 INCH SQUEEGEE ASSEMBLY	1
7	N/A	MODEL 2023 FRAME ASSEMBLY	1
8	N/A	SQUEEGEE SUSPENSION ASSEMBLY	1

FRAME & SCRUB DECK

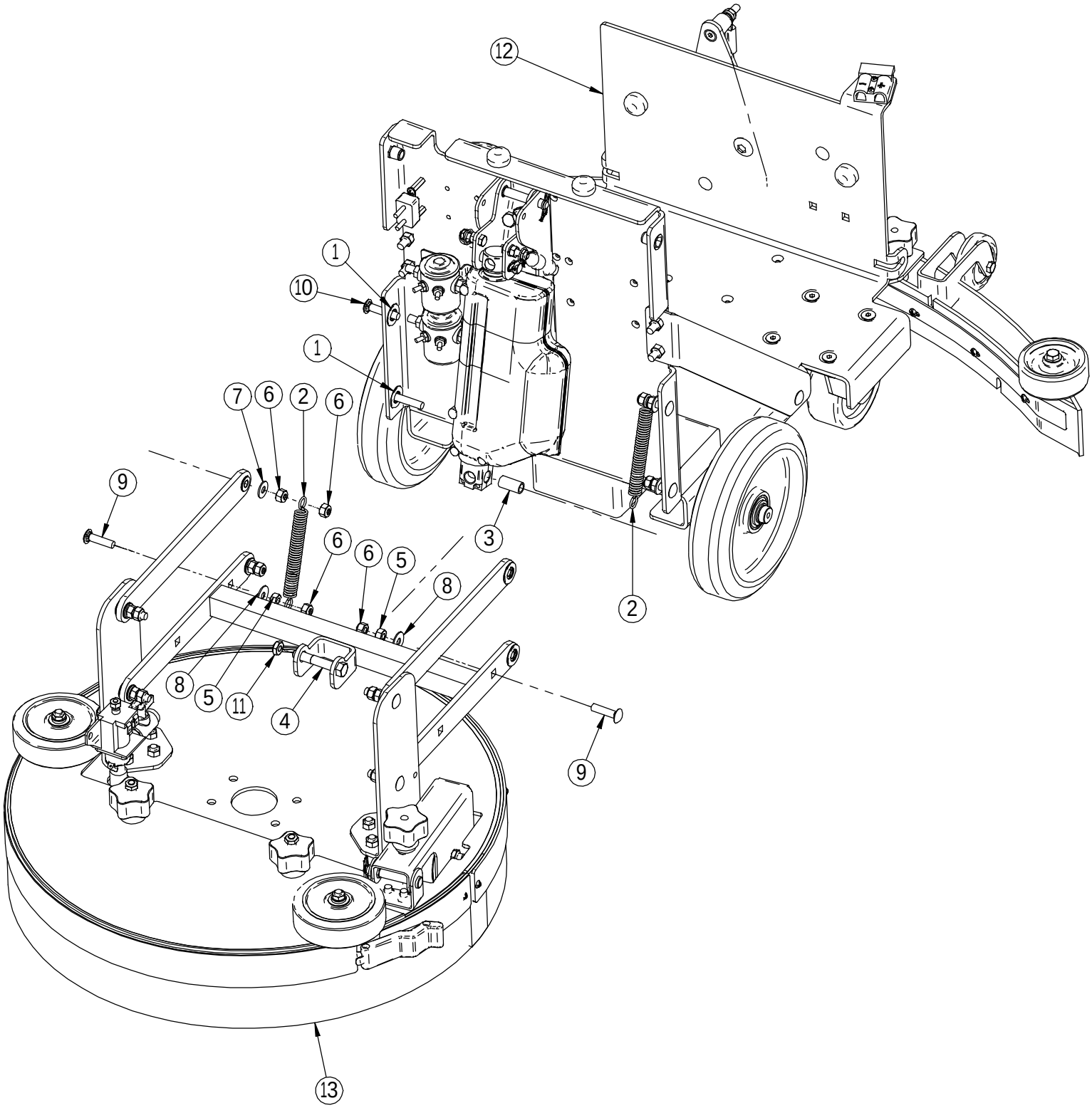

FRAME & SCRUB DECK

Item	Part Number	Part Description	Qty
1	290-1247	FW BRONZE .50" ID X 1.0" OD X .062	2
2	390-7712	COMPRESSION SPRING	2
3	H-63917	SLEEVE, .50 OD X .375 ID X 1.0 LG	1
4	H-70112	HCS 3/8"- 16 X 2-1/4" SS	1
5	H-70711	HN 5/16"- 18 SS	2
6	H-70861	NYLOK 5/16" - 18 SS	4
7	H-71015	FW 5/16" X 3/4" SAE SS	1
8	H-71016	FW 5/16" X 7/8" SS	2
9	H-74431	CB 5/16"- 18 X 1-1/4" SS	2
10	H-74432	CB 5/16"- 18 X 1-1/2" SS	1
11	H-NJ06C	JNYL 3/8- 16 SS	1
12	N/A	MODEL 2023 FRAME ASSEMBLY	1
13	N/A	SCRUB DECK ASSEMBLY	1

FRAME, BATTERIES, TANK, TANK LID, CONTROL PANEL, HANDLE BAR

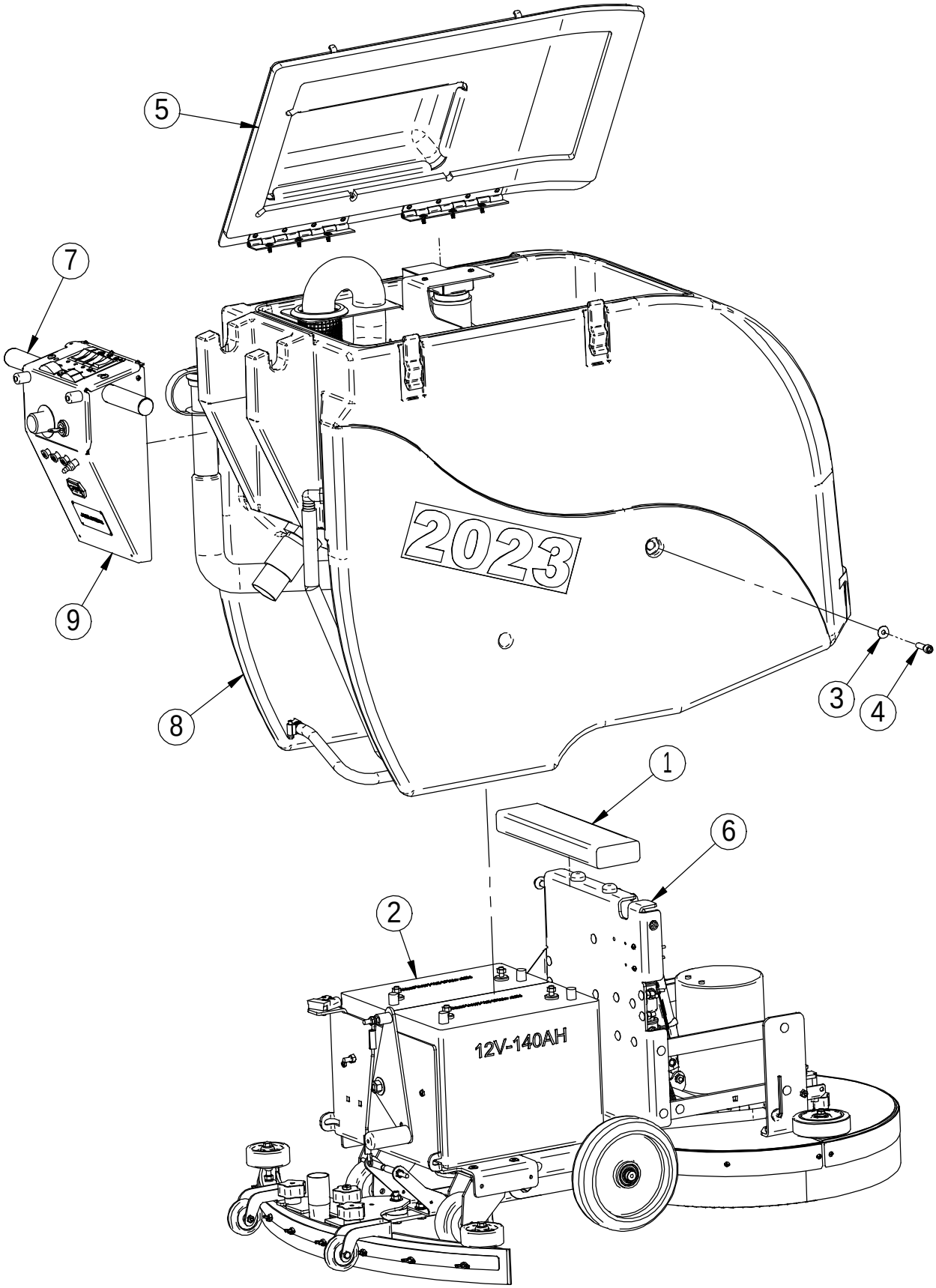

FRAME, BATTERIES, TANK, TANK LID, CONTROL PANEL, HANDLE BAR

Item	Part Number	Part Description	Qty
1	190-1095	2 X 4 X 13-1/2" LG	1
2	190-2110	BATTERY, 12 V, 140 AH, 230 RC	1
3	H-71016	FW 5/16" X 7/8" SS	1
4	H-73541	SHCS 3/8"- 16 X 1 1/4" SS	1
5	N/A	MODEL 2023 TANK LID ASSEMBLY	1
6	N/A	MODEL 2023 FRAME ASSEMBLY	1
7	N/A	MODEL 2023 HANDLE BAR ASSEMBLY	1
8	N/A	MODEL 2023 TANK ASSEMBLY	1
9	N/A	CONTROL PANEL ASSEMBLY	1